Pure Aqua, Inc.®
Reverse Osmosis & Water Treatment Systems
sales@pureaqua.com
+1(714) 432-9996
+1 (844) 309-7501
Get a Quote
www.pureaqua.com

PENTAIR

FLECK 2510 & 2510 ECONOMINDER

SERVICE MANUAL

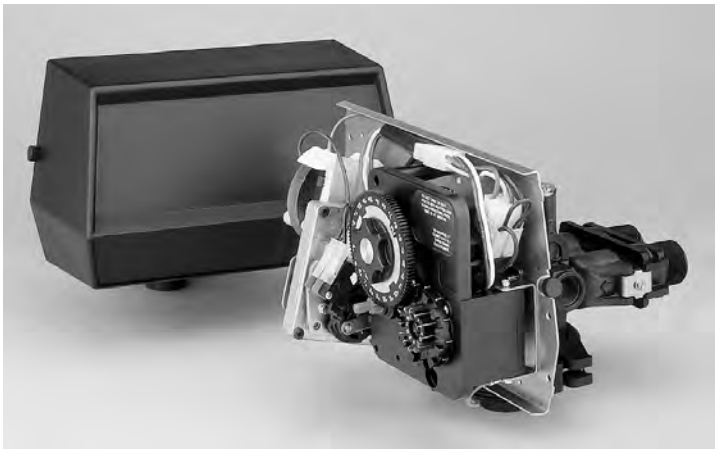

TABLE OF CONTENTS

JOB SPECIFICATION SHEET 2
INSTALLATION 3
START-UP INSTRUCTIONS 3
3200 TIMER SETTING PROCEDURE 4
3210 TIMER SETTING PROCEDURE 4
3200, 3210, 3220, 3230 REGENERATION CYCLE SETTING PROCEDURE 5
3200 TIME CLOCK TIMER ASSEMBLY 6
3210 METER DELAYED TIMER ASSEMBLY 8
3220 METER IMMEDIATE TIMER ASSEMBLY 10
POWERHEAD ASSEMBLY (ENVIRONMENTAL) 12
MANUAL POWERHEAD ASSEMBLY 14
CONTROL VALVE ASSEMBLY 15
SOFTENER FILTER CONVERSION KITS 17
METER ASSEMBLY 18
1600 BRINE SYSTEM ASSEMBLY 19
1650 BRINE SYSTEM 20
BYPASS VALVE ASSEMBLY (PLASTIC) 21
BYPASS VALVE ASSEMBLY (METAL) 22
2300 SAFETY BRINE VALVE 23
2310 SAFETY BRINE VALVE 24
SEAL & SPACER TOOLS & REPLACEMENT 26
GENERAL SERVICE HINTS FOR METER CONTROL 27
TROUBLESHOOTING 28
FLOW DATA & INJECTOR DRAW RATES 29
WIRING 30
SERVICE ASSEMBLIES 31

CALIFORNIA PROPOSITION 65 WARNING

⚠ WARNING: This product contains chemicals known to the State of California to cause cancer or birth defects or other reproductive harm.

JOB SPECIFICATION SHEET

Job Number: _____

Model Number: _____

Water Hardness: _____ ppm or gpg

Capacity Per Unit: _____

Mineral Tank Size: _____ Diameter: _____ Height: _____

Salt Setting per Regeneration: _____

1. **Type of Timer:**
   - A. 7 Day or 12 Day
   - B. Meter Initiated
2. **Downflow:** **Upflow** **Upflow Variable**
3. **Meter Size:**
   - A. 3/4-inch Std Range (125 - 2,100 gallon setting)
   - B. 3/4-inch Ext Range (625 - 10,625 gallon setting)
   - C. 1-inch Std Range (310 - 5,270 gallon setting)
   - D. 1-inch Ext Range (1,150 - 26,350 gallon setting)
   - E. 1-1/2 inch Std Range (625 - 10,625 gallon setting)
   - F. 1-1/2 inch Ext Range (3,125 - 53,125 gallon setting)
   - G. 2-inch Std Range (1,250 - 21,250 gallon setting)
   - H. 2-inch Ext Range (6,250 - 106,250 gallon setting)
   - I. 3-inch Std Range (3,750 - 63,750 gallon setting)
   - J. 3-inch Ext Range (18,750 - 318,750 gallon setting)
   - K. Electronic ____ Pulse Count ___ Meter Size _____
4. **System Type:**
   - A. System #4: 1 Tank, 1 Meter, Immediate, or Delayed Regeneration
   - B. System #4: Time Clock
   - C. System #4: Twin Tank
   - D. System #5: 2-5 Tanks, Interlock Mechanical
     2-4 Tanks, Interlock Electronic
     Meter per unit for Mechanical and Electronic
   - E. System #6: 2-5 Tanks, 1 Meter, Series Regeneration, Mechanical
     2-4 Tanks, 1 Meter, Series Regeneration, Electronic
   - F. System #7: 2-5 Tanks, 1 Meter, Alternating Regeneration, Mechanical
     2 Tanks only, 1 Meter, Alternating Regeneration, Electronic
   - G. System #9: Electronic Only, 2-4 Tanks, Meter per Valve, Alternating
   - H. System #14: Electronic Only, 2-4 Tanks, Meter per Valve. Brings units on and offline based on flow.
5. **Timer Program Settings:**
   - A. Backwash: _____ Minutes
   - B. Brine and Slow Rinse: _____ Minutes
   - C. Rapid Rinse: _____ Minutes
   - D. Brine Tank Refill: _____ Minutes
   - E. Pause Time: _____ Minutes
   - F. Second Backwash: _____ Minutes
6. **Drain Line Flow Control: _____ gpm**
7. **Brine Line Flow Controller: _____ gpm**
8. **Injector Size#: _____**
9. **Piston Type:**
   - A. Hard Water Bypass
   - B. No Hard Water Bypass

INSTALLATION

Water Pressure

A minimum of 20 pounds (1.4 bar) of water pressure is required for regeneration valve to operate effectively.

Electrical Facilities

An uninterrupted alternating current (A/C) supply is required.

NOTE: Other voltages are available. Please make sure your voltage supply is compatible with your unit before installation.

Existing Plumbing

Condition of existing plumbing should be free from lime and iron buildup. Piping that is built up heavily with lime and/or iron should be replaced. If piping is clogged with iron, a separate iron filter unit should be installed ahead of the water softener.

Location Of Softener And Drain

The softener should be located close to a drain to prevent air breaks and back flow.

Bypass Valves

Always provide for the installation of a bypass valve if unit is not equipped with one.

CAUTION Water pressure is not to exceed 125 psi (8.6 bar), water temperature is not to exceed 110°F (43°C), and the unit cannot be subjected to freezing conditions.

Installation Instructions

1. Place the softener tank where you want to install the unit making sure the unit is level and on a firm base.
2. During cold weather, the installer should warm the valve to room temperature before operating.
3. All plumbing should be done in accordance with local plumbing codes. The pipe size for residential drain line should be a minimum of 1/2 inch (13 mm). Backwash flow rates in excess of 7 gpm (26.5 Lpm) or length in excess of 20 feet (6 m) require 3/4-inch (19 mm) drain line. Commercial drain lines should be the same size as the drain line
flow control.
4. Refer to the dimensional drawing for cutting height of the distributor tube. If there is no dimensional drawing, cut the distributor tube flush with the top of the tank.
5. Lubricate the distributor o-ring seal and tank o-ring seal. Place the main control valve on tank.

NOTE: Only use silicone lubricant.

6. Solder joints near the drain must be done prior to connecting the Drain Line Flow Control fitting (DLFC). Leave at least 6 inches (15 cm) between the DLFC and solder joints when soldering pipes that are connected on the DLFC. Failure to do this could cause interior damage to the DLFC.
7. Plumber tape is the only sealant to be used on the drain fitting. The drain from twin tank units may be run through a common line.
8. Make sure that the floor is clean beneath the salt storage tank and that it is level.
9. Place approximately 1 inch (25 mm) of water above the grid plate. If a grid is not utilized, fill to the top of the air check (Figure 1) in the salt tank. Do not add salt to the brine tank at this time.
10. On units with a bypass, place in bypass position. Turn on the main water supply. Open a cold soft water tap nearby and let run a few minutes or until the system is free from foreign material (usually solder) that may have resulted from the installation. Once clean, close the water tap.
11. Slowly place the bypass in service position and let water flow into the mineral tank. When water flow stops, slowly open a cold water tap nearby and let run until the air is purged from the unit.
12. Plug unit into an electrical outlet.

NOTE: All electrical connections must be connected according to local codes. Be certain the outlet is uninterrupted.

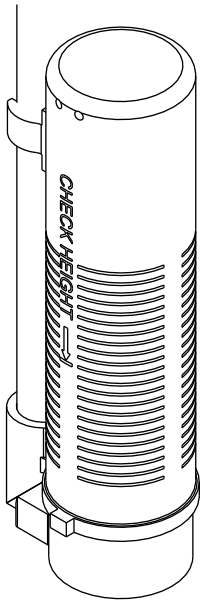

60002 Rev E

Figure 1 Residential Air Check Valve

START-UP INSTRUCTIONS

The water softener should be installed with the inlet, outlet, and drain connections made in accordance with the manufacturer's recommendations, and to meet applicable plumbing codes.

1. Turn the manual regeneraton knob slowly in a clockwise direction until the program micro switch lifts on top of the first set of pins. Allow the drive motor to move the piston to the first regeneration step and stop. Each time the program switch position changes, the valve will advance to the next regeneration step. Always allow the motor to stop before moving to the next set of pins or spaces.

NOTE: For electronic valves, please refer to the manual regeneration part of the timer operation section. If the valve came with a separate electronic timer service manual, refer to the timer operation section of the electronic timer service manual.

2. Position the valve to backwash. Ensure the drain line flow remains steady for 10 minutes or until the water runs clear (see above).
3. Position the valve to the brine / slow rinse position. Ensure the unit is drawing water from the brine tank (this step may need to be repeated).
4. Position the valve to the rapid rinse position. Check the drain line flow, and run for 5 minutes or until the water runs clear.

STARTUP INSTRUCTIONS *CONTINUED*

5. Position the valve to the start of the brine tank fill cycle. Ensure water goes into the brine tank at the desired rate. The brine valve drive cam will hold the valve in this position to fill the brine tank for the first regeneration.
6. Replace control box cover.
7. Put salt in the brine tank.

NOTE: Do not use granulated or rock salt.

3200 TIMER SETTING PROCEDURE

How To Set Days On Which Water Conditioner Is To Regenerate (Figure 2)

Rotate the skipper wheel until the number "1" is at the red pointer. Set the days that regeneration is to occur by sliding tabs on the skipper wheel outward to expose trip fingers. Each tab is one day. Finger at red pointer is tonight. Moving clockwise from the red pointer, extend or retract fingers to obtain the desired regeneration schedule.

How To Set The Time Of Day

1. Press and hold the red button in to disengage the drive gear.
2. Turn the large gear until the actual time of day is at the time of day pointer.
3. Release the red button to again engage the drive gear.

How To Manually Regenerate Your Water Conditioner At Any Time

1. Turn the manual regeneration knob clockwise.
2. This slight movement of the manual regeneration knob engages the program wheel and starts the regeneration program.
3. The black center knob will make one revolution in the following approximately three hours and stop in the position shown in the drawing.
4. Even though it takes three hours for this center knob to complete one revolution, the regeneration cycle of your unit might be set for only one half of this time.
5. In any event, conditioned water may be drawn after rinse water stops flowing from the water conditioner drain line.

How to Adjust Regeneration Time

1. Disconnect the power source.
2. Locate the three screws behind the manual regeneration knob by pushing the red button in and rotating the 24 hour dial until each screw appears in the cut out portion of the manual regeneration knob.
3. Loosen each screw slightly to release the pressure on the time plate from the 24-hour gear.
4. Locate the regeneration time pointer on the inside of the 24-hour dial in the cut out.
5. Turn the time plate so the desired regeneration time aligns next to the raised arrow.
6. Push the red button in and rotate the 24-hour dial. Tighten each of the three screws.
7. Push the red button and locate the pointer one more time to ensure the desired regeneration time is correct.
8. Reset the time of day and restore power to the unit.

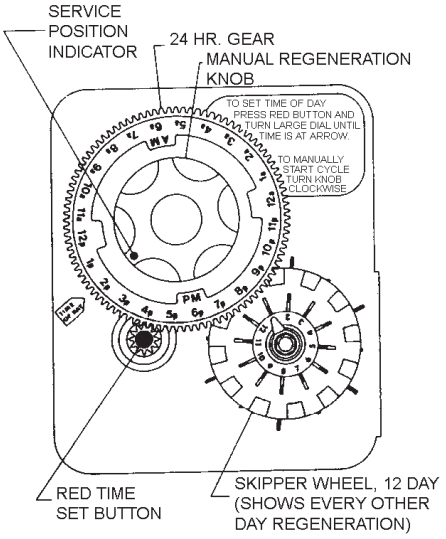

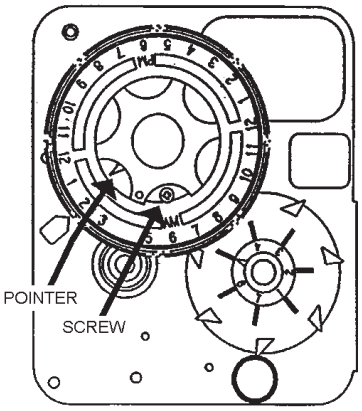

3200 ADJUSTABLE REGENERATION TIMER

IMPORTANT!
SALT LEVEL MUST ALWAYS BE ABOVE WATER LEVEL IN BRINE TANK

61502-3200 Rev A

Figure 2

3210 TIMER SETTING PROCEDURE

Typical Programming Procedure

Calculate the gallon capacity of the system, subtract the necessary reserve requirement and set the gallons available opposite the small white dot on the program wheel gear (Figure 3).

NOTE: Drawing shows 8,750 gallon setting. The capacity (gallons) arrow (15) shows zero gallons remaining. The unit will regenerate tonight at the set regeneration time.

How To Set The Time Of Day

1. Press and hold the red button in to disengage the drive gear.
2. Turn the large gear until the actual time of day is opposite the time of day pointer.
3. Release the red button to again engage the drive gear.

How To Manually Regenerate Your Water Conditioner At Any Time

1. Turn the manual regeneration knob clockwise.
2. This slight movement of the manual regeneration knob engages the program wheel and starts the regeneration program.

3210 TIMER SETTING PROCEDURE

CONTINUED

3. The black center knob will make one revolution in the following approximately three hours and stop in the position shown in the drawing.
4. Even though it takes three hours for this center knob to complete one revolution, the regeneration cycle of your unit might be set for only one half of this time.
5. In any event, conditioned water may be drawn after rinse water stops flowing from the water conditioner drain line.

Immediate Regeneration Timers

These timers do not have a 24-hour gear. Setting the gallons on the program wheel and manual regeneration procedure are the same as previous instructions. The timer will regenerate as soon as the capacity gallons reaches zero.

NOTE: The program wheel to the left may be different than the program wheel on the product.

NOTE: To set meter capacity rotate manual knob one - 360° revolution to set gallonage.

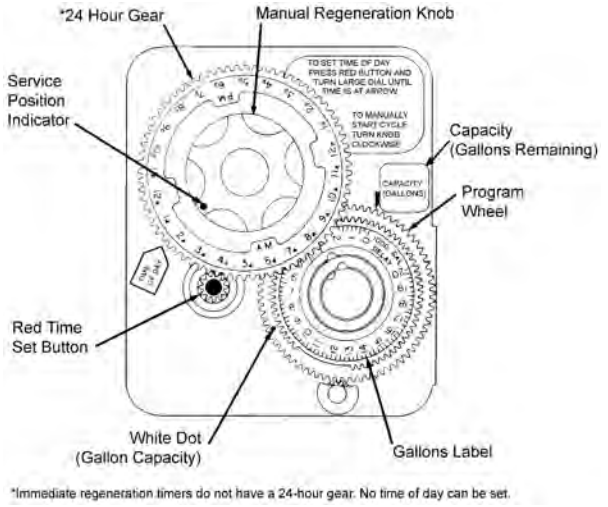

61502-3200 Rev A

Figure 3

3200, 3210, 3220, 3230 REGENERATION CYCLE SETTING PROCEDURE

How To Set The Regeneration Cycle Program

The regeneration cycle program on your water conditioner has been factory preset, however, portions of the cycle or program may be lengthened or shortened in time to suit local conditions.

3200 Series Timers (Figure 4)

1. To expose cycle program wheel, grasp timer in upper left-hand corner and pull, releasing snap retainer and swinging timer to the right.
2. To change the regeneration cycle program, the program wheel must be removed. Grasp program wheel and squeeze protruding lugs toward center, lift program wheel off timer. Switch arms may require movement to facilitate removal.
3. Return timer to closed position engaging snap retainer in back plate. Make certain all electrical wires locate above snap retainer post.

Timer Setting Procedure

How To Change The Length Of The Backwash Time

The program wheel as shown in the drawing is in the service position. As you look at the numbered side of the program wheel, the group of pins starting at zero determines the length of time your unit will backwash.

For example, if there are six pins in this section, the time of backwash will be 12 min. (2 min. per pin). To change the length of backwash time, add or remove pins as required. The number of pins times two equals the backwash time in minutes.

How To Change The Length Of Brine And Rinse Time

1. The group of holes between the last pin in the backwash section and the second group of pins determines the length of time that your unit will brine and rinse (2 min. per hole).
2. To change the length of brine and rinse time, move the rapid rinse group of pins to give more or fewer holes in the brine and rinse section. Number of holes times two equals brine and rinse time in minutes.

How To Change The Length Of Rapid Rinse

1. The second group of pins on the program wheel determines the length of time that your water conditioner will rapid rinse (2 min. per pin).
2. To change the length of rapid rinse time, add or remove pins at the higher numbered end of this section as required. The number of pins times two equals the rapid rinse time in minutes.

How To Change The Length Of Brine Tank Refill Time

1. The second group of holes in the program wheel determines the length of time that your water conditioner will refill the brine tank (2 min. per hole).
2. To change the length of refill time, move the two pins at the end of the second group of holes as required.
3. The regeneration cycle is complete when the outer microswitch is tripped by the two pin set at end of the brine tank refill section.
4. The program wheel, however, will continue to rotate until the inner micro switch drops into the notch on the program wheel.

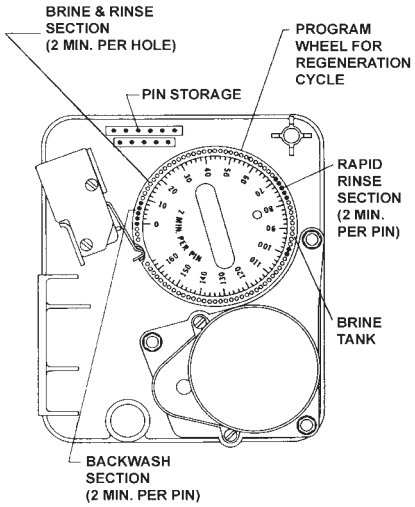

61502-3210 Rev A

Figure 4

3200 TIME CLOCK TIMER ASSEMBLY

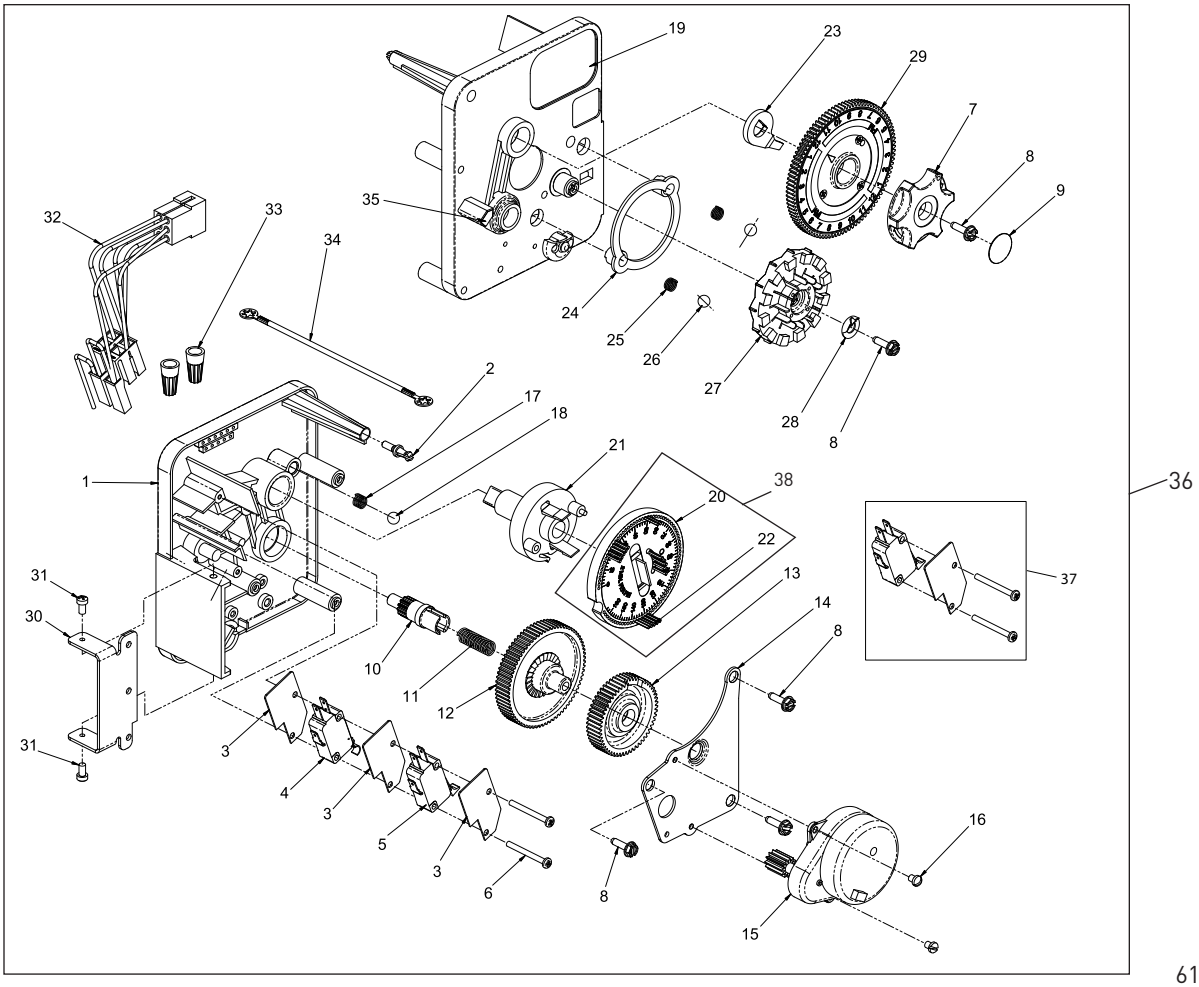

615023200 Rev A

3200 TIME CLOCK TIMER ASSEMBLY

CONTINUED

Item No.	QTY	Part No.	Description
1	1	13870	Housing, Timer, 3200
2	1	14265	Clip, Sping
3	3	14087	Insulator
4	1	10896	Switch, Micro
5	1	15320	Switch, Micro, Timer
6	2	11413	Screw, Pan Hd Mach, 4-40 x 1-1/8
7	1	13886	Knob, 3200
8	5	13296	Screw, Hex Wsh, 6-20 x 1/2
9	1	11999	Label, Button
10	1	13018	Pinion, Idler
11	1	13312	Spring, Idler Shaft
12	1	13017	Gear, Idler
13	1	13164	Gear, Drive
14	1	13887	Plate, Motor Mounting
15	1	18743-1	Motor, 120V, 60Hz, 1/30 RPM
		18752-1	Motor, 100V, 50Hz, 1/30 RPM
		18824-1	Motor, 230V, 50Hz, 1/30 RPM
		18826-1	Motor, 24V, 50Hz, 1/30 RPM
		19659-1	Motor, 24V, 60Hz, 1/30 RPM
		19660-1	Motor, 230V, 60Hz, 1/30 RPM
16	2	13278	Screw, Sltd Fillister Hd 6-32 x .156
17	1	15424	Spring, Detent, Timer
18	1	15066	Ball, 1/4-inch, Delrin
19	1	15465	Label, Caution
20	1	19210	Program Wheel Assy
21	1	13911	Gear, Main Drive, Timer
22	17	41754	Pin, Spring, 1/16 x 5/8 SS, Timer
23	1	13011	Arm, Cycle Actuator
24	1	13864	Ring, Skipper Wheel
25	2	13311	Spring, Detent, Timer
26	2	13300	Ball, 1/4-inch, SS
27	1	14381	Skipper Wheel Assy, 12 Day
		14860	Skipper Wheel Assy, 7 Day
28	1	13014	Pointer, Regeneration
29	1	40096-24	Dial, 12 AM Regen Assy, Black
		40096-02	Dial, 2 AM Regen Assy, Black
30	1	13881	Bracket, Hinger Timer
31	2	11384	Screw, Phil, 6-32 x 1/4 Zinc
32	1	13902	Harness, 3200
33	2	40422	Nut, Wire, Tan
34	1	15354-01	Wire, Ground, 4 inches
35	1	14007	Label, Time of Day
36	1	*	Complete 3200 Time Clock Timer Assembly
37		60320-02	Switch Kit, 3200/9000 Timer Auxiliary, Optional
38		61420-03	Program Wheel, Gear Assy, Filter 2 Min Per Pin
		61420-04	Program Wheel, Gear Assy, Softener, 2 Min Per Pin

*Call your distributor for Part Number

3210 METER DELAYED TIMER ASSEMBLY

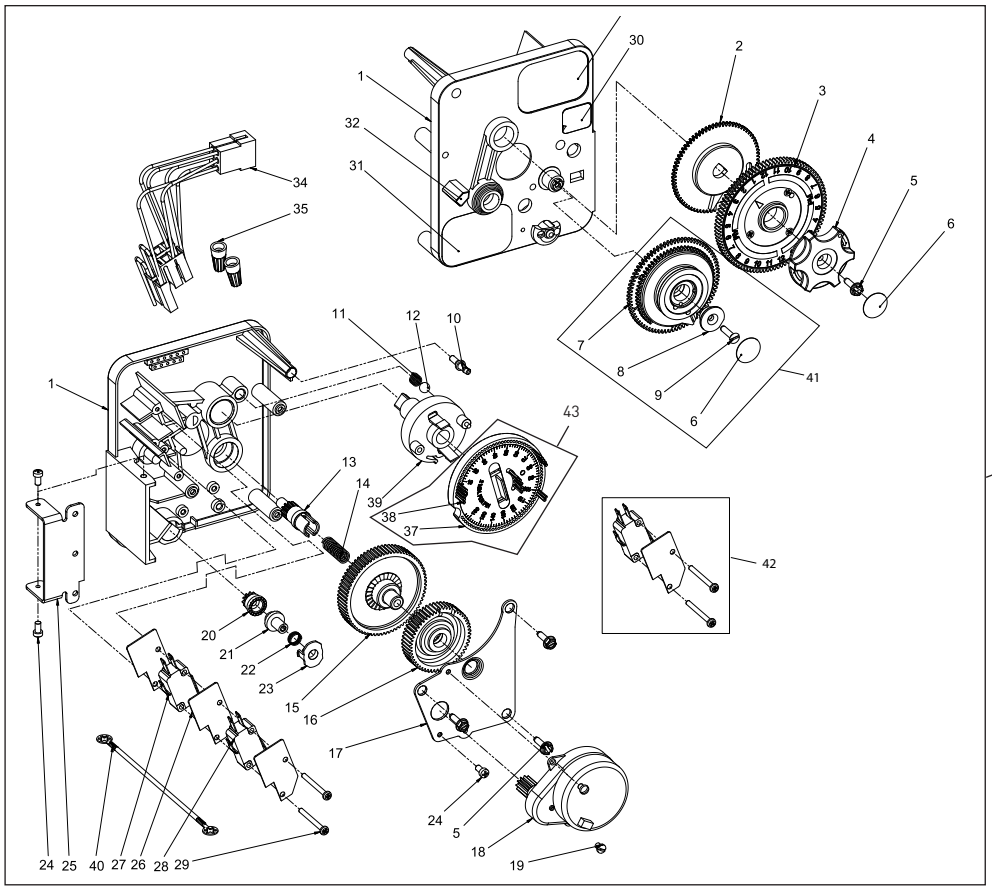

40

61502-3210 Rev A

3210 METER DELAYED TIMER ASSEMBLY

CONTINUED

Item No.	QTY	Part No.	Description
1	1	13870	Housing, Timer, 3200
2	1	13802	Gear, Cycle Actuator
3	1	40096-02	Dial 2 AM Regen Assy, Black
4	1	13886	Knob, 3200
5	4	13296	Screw, Hex Wsh, 6-20 x 1/2
6	2	11999	Label, Button
7	1	13803	Gear, Program Drive Wheel
8	1	13806	Retainer, Program Wheel
9	1	13748	Screw, Flat Head St, 6-20 x 1/2
10	1	14265	Clip, Spring
11	1	15424	Spring, Detent, Timer
12	1	15066	Ball, 1/4-inch Delrin
13	1	13018	Pinion, Idler
14	1	13312	Spring, Idler Shaft
15	1	13017	Gear, Idler
16	1	13164	Gear, Drive
17	1	13887	Plate, Motor Mounting
18	1	18743-1	Motor, 120V, 60Hz 1/30 RPM
		18752-1	Motor, 100V, 50Hz, 1/30 RPM
		18824-1	Motor, 230V, 50Hz, 1/30 RPM
		18826-1	Motor, 24V, 50Hz, 1/30 RPM
		19659-1	Motor, 24V, 60Hz, 1/30 RPM
		19660-1	Motor, 230V, 60Hz, 1/30 RPM
19	1	13278	Screw, Fillister Hd, 6-32 x .156
20	1	13830	Pinion, Program Wheel Drive
21	1	13831	Clutch, Drive Pinion
22	1	14276	Spring, Meter, Clutch
23	1	14253	Retainer, Clutch Spring
24	3	11384	Screw, Phil, 6-32 x 1/4
25	1	13881	Bracket, Hinge Timer
26	3	14087	Insulator
27	1	10896	Switch, Micro
28	1	15320	Switch, Micro, Timer
29	2	11413	Screw, Pan Hd Mach, 4-40 x 1 1/8
30	1	14198	Label, Indicator
31	1	15465	Label, Caution
32	1	14007	Label, Time of Day
33	1	14045	Label, Instruction
34	1	13902	Harness, 3200
35	2	40422	Nut, Wire, Tan
36	1	15354-01	Wire, Ground, 4 inches
37	1	19210	Program Wheel Assy
38	17	41754	Pin, Spring, 1/16 x 5/8 SS, Timer
39	1	13911	Gear, Main Drive, Timer
40	1	*	Complete 3210 Meter Delayed Timer Assembly
41		60405-10	Program Wheel, w/3/4-inch STD Label 0-2,100 gal
		60405-20	Program Wheel, w/3/4-inch EXT Label 0-10,000 gal
		60405-11	Program Wheel, w/3/4-inch STD Metric Label 0-8 m3
		60405-21	Program Wheel, w/3/4-inch EXT Range 0-40 m3
42		60320-02	Switch Kit, 3200/9000 Timer Auxiliary, Optional
43		61420-03	Program Wheel, Gear Assy, Filter 2 Min Per Pin
		61420-04	Program Wheel, Gear Assy, Softener, 2 Min Per Pin

*Call your distributor for Part Number

3220 METER IMMEDIATE TIMER ASSEMBLY

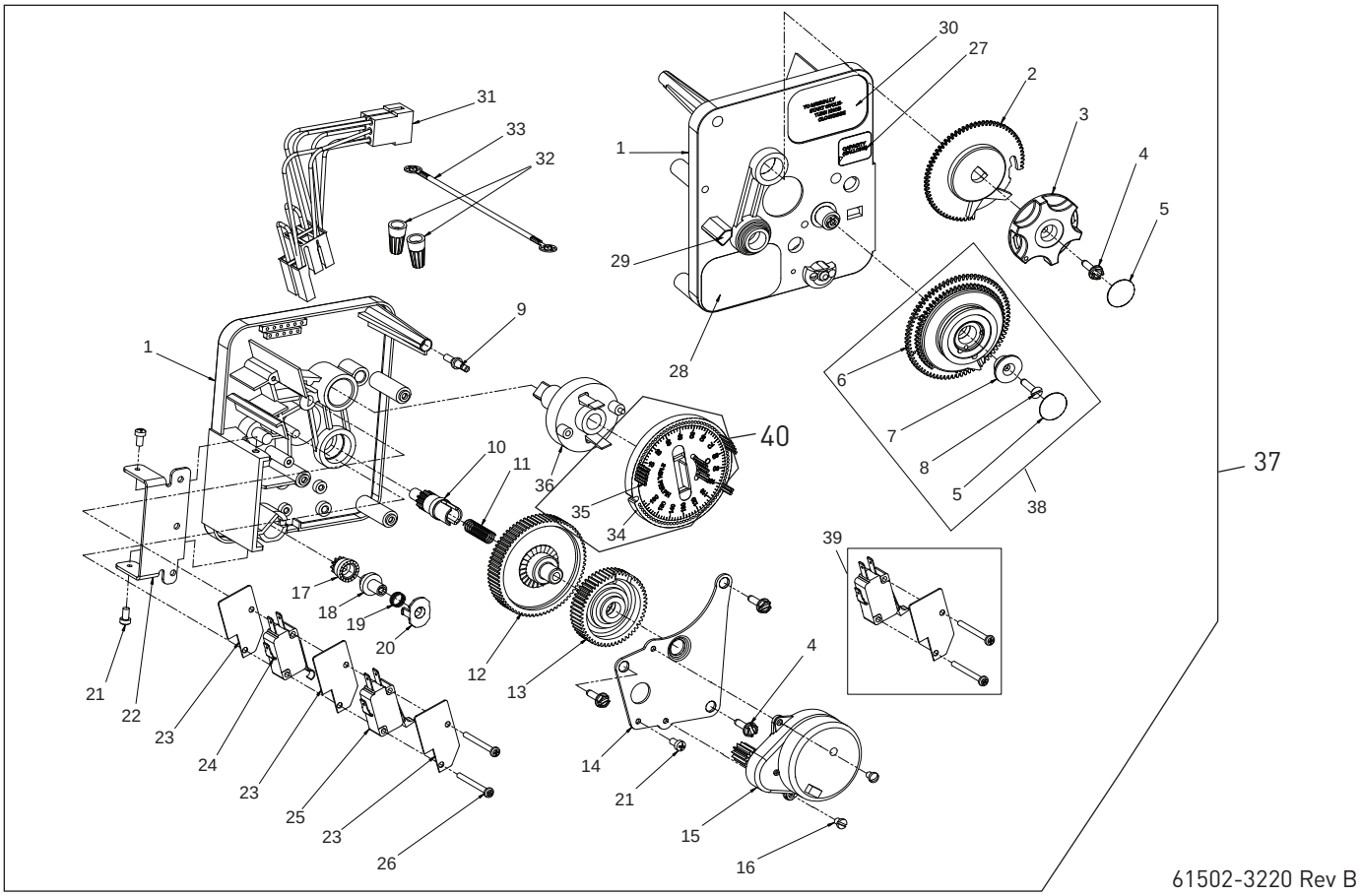

3220 METER IMMEDIATE TIMER
ASSEMBLY *CONTINUED*

Item No.	QTY	Part No.	Description
1	1	13870	Housing, Timer
2	1	15431	Gear, Cycle Actuator, System #5
3	1	13886	Knob, 3200
4	4	13296	Screw, Hex Wsh, 6-20 x 1/2
5	2	11999	Label, Button
6	1	13807	Gear, Program Drive Wheel
7	1	13806	Retainer, Program Wheel
8	1	13748	Screw, Flt Hd St, 6-20 x 1/2
9	1	14265	Spring Clip
10	1	13018	Pinion, Idler
11	1	18563	Idler Shaft Spring
12	1	13017	Gear, Idler
13	1	13164	Drive Gear
14	1	13887	Plate, Motor Mounting
15	1	18743-1	Motor, 120V, 60 Hz, 1/30 RPM
		18752-1	Motor, 100V, 50Hz, 1/30 RPM
		18824-1	Motor, 230V, 50Hz, 1/30 RPM
		18826-1	Motor, 24V, 50Hz, 1/30 RPM
		19659-1	Motor, 24V, 60Hz, 1/30 RPM
		19660-1	Motor, 230V, 60Hz, 1/30 RPM
16	2	13278	Screw, Sltd Fillister Hd
17	1	14502	Pinion, Program Wheel
18	1	14501	Clutch, Drive Pinion
19	1	14276	Meter Clutch Spring
20	1	14253	Retainer, Clutch Spring
21	3	11384	Screw, Phil, 6-32 x 1/4 Zinc
22	1	13881	Bracket, Hinge Timer
23	3	14087	Insulator
24	1	15414-00	Micro Switch
25	1	15320	Switch, Micro, Timer
26	2	11413	Screw, Pan Hd Mach, 4-40 x 1-1/8
27	1	14198	Label, Indicator
28	1	15465	Label, Caution
29	1	14007	Label, Time of Day
30	1	15148	Label, Instruction
31	1	40617	Harness, 3220
32	2	40422	Nut, Wire, Tan
33	1	15354-01	Wire, Ground, 4 inches
34	1	19210-05	Program Wheel Assembly, 9000/3230
35	17	41754	Pin, Spring, 1/16 x 5/8 Stainless Steel, Timer
36	1	15055	Gear, Main Drive
37	1	*	Complete 3220 Meter Immediate Timer Assy
38		60405-10	Program Wheel, w/3/4-inch STD Label 0-2,100 gal
		60405-20	Program Wheel, w/3/4-inch EXT Label 0-10,000 gal
		60405-11	Program Wheel, w/3/4-inch STD Metric Label 0-8 m3
		60405-21	Program Wheel, w/3/4-inch EXT Range 0-40 m3
39		60320-02	Switch Kit, 3200/9000 Timer Auxiliary, Optional
40		61420-06	Program Wheel, Gear Assy, Softener Immediate 2 Min Per Pin
		61420-42	Program Wheel, Gear Assy, Filter Immediate 2 Min Per Pin

*Call your distributor for Part Number

POWERHEAD ASSEMBLY (ENVIRONMENTAL)

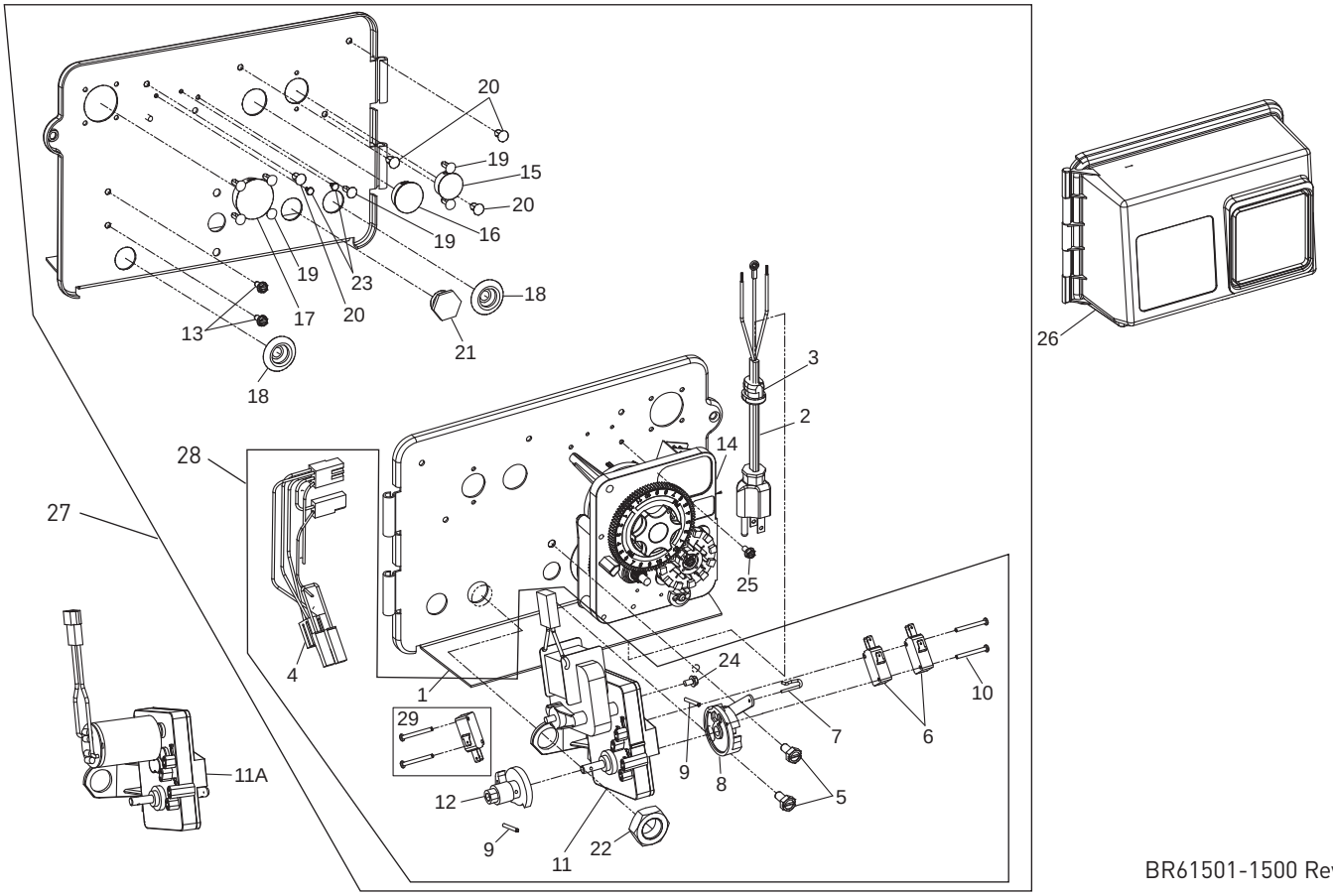

BR61501-1500 Rev C

POWERHEAD ASSEMBLY (ENVIRONMENTAL) *CONTINUED*

Item No.	QTY	Part No.	Description
1	1	18697-15	Backplate, Hinged
2	1	11838	Power Cord, 6-feet, North American, Flat
		19303-01	Power Cord, 6-feet, Austrailian
		19885-01	Power Cord, 6-feet, Japanese
		11545-01	Power Cord, 6-feet, European
3	1	13547	Strain Relief, Cord
4	1	40400	Harness, Drive Designr/ Envirmtl
5	2	10231	Screw, Slot Hex 1/4-20 x 1/2 35 in-lbs ±20%
6	2	10218	Switch, Micro
7	1	10909	Pin, Connecting Rod Spring
8	1	60160-15	Drive Cam Assy, STF, Blue, 2900
9	2	10338	Pin, Roll, 3/32 x 7/8
10	2	14923	Screw, Pan Hd MACH, 4-40 x 1 5.0 in-lbs ±10%
11	1	41543	Motor, Drive, 115V/60 Hz
		41545	Motor, Drive, 220V, 50-60Hz, SP, Fam 1
11A		42579	Motor, Drive, 24 VAC/DC, 50-60 Hz, Fam 1
12	1	12777	Cam, Shut-off Valve
13	2	10300	Screw, Hx Wash Head, 8 x 3/8 20 in-lbs ±20%
14	1	3200	Timer Assy, 3200 7 or 12 Day
			3210 Meter Delay
			3220 Meter Immediate
15	1	15806	Hole Plug, (HeyCo)
16	1	16493	Plug, Hole, HeyCo, .88 Dia
17	1	17421	Plug, 1.20 Hole
18	2	19691	Plug, .750 Dia. Hole, Flush
19	7	19800	Plug (Hole Size: Dia .140)
20	4	19801	Plug, Dia .190
21	1	43560	Fitting, Brine Valve (Used on Filter Valves)
22	1	10269	Nut, Jam, 3/4-16 (Used on FIlter Valves)
			Wrench Tighten
23	2	41581	Plug, Hole .125 Dia, White
24	1	10872	Screw, Hex WSH, 8-32 x 5/16 20 IN-LBS ±20%
25	1	14202-01	Screw, Hex Washer #8-32 x 5/16 Hand Tighten
26	1	60219-02	Cover Assy, Environmental, Black, Clear Window
		60219-12	Cover Assy, Environmental, Black, Black Window
27	1	*	Powerhead Assembly
28	1	60050-23	Drive Motor Assy, 24 VAC/ DC, 50-60 Hz FAM 1
		60050-21	Drive Motor Assy, 115V/60 Hz
		60050-22	Drive Motor Assy, 220V, 50-60 Hz SP FAM1
29		60320-12	Switch Kit, 1500-2850 Drive Motor

Not Shown:

1	15441	Cable Guide Assy, 2510
1	15495	Meter Cable, 13.87 inches

*Call your distributor for Part Number

MANUAL POWERHEAD ASSEMBLY

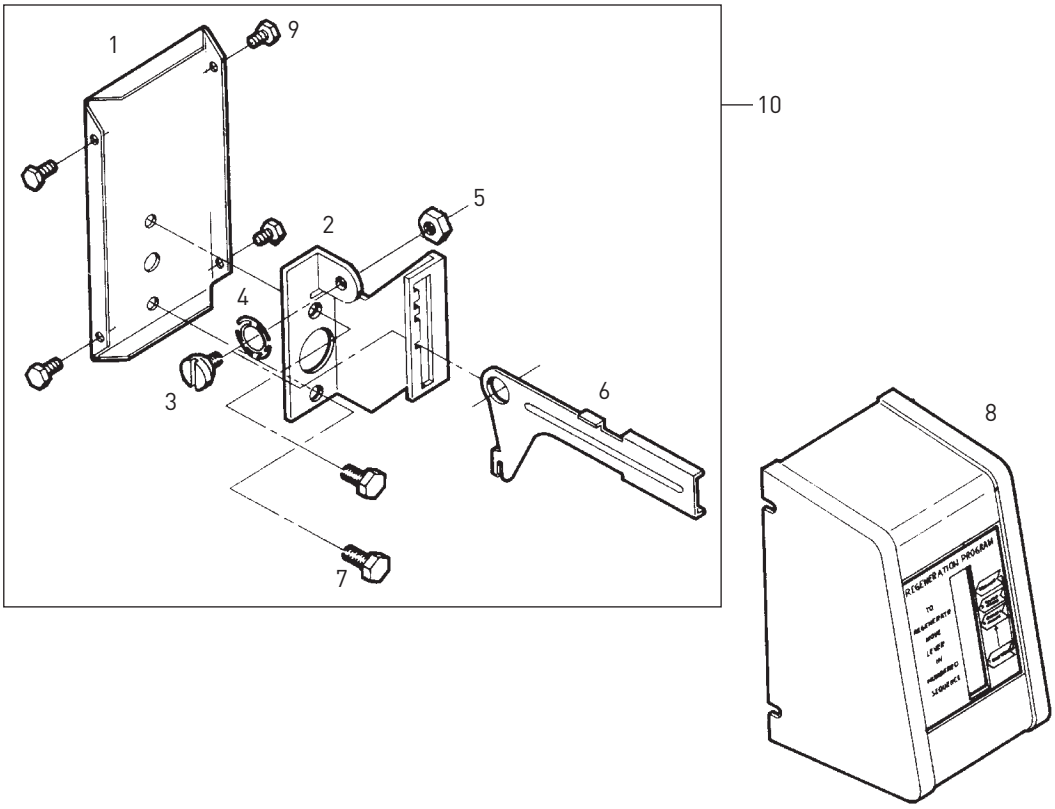

60409 Rev A

Item No.	QTY	Part No.	Description
1	1	12593	Backplate, Manual
2	1	12592	Bracket, Lever Position
3	1	12596	Screw, Spec Mach, 1/4 - 20 x 1/2
4	1	12707	Washer, Spring
5	1	11235	Nut, Hex, 1/4 - 20, Mach Screw, Zinc
6	1	12594	Lever, Valve Position
7	2	10231	Screw, Slot Hex, 1/4 - 20 x 1/2 18-8 SS
8	1	60224-32	Cover Assy, Manual, Filter
	1	60224-33	Cover Assy, Manual, Softener
9	4	10300	Screw, Slot Hex Wsh, 8-18 x 3/8 Type "B" RC44-47
10		60409	Powerhead Assy, Manual

Not Shown:

	1	10909	Pin, Link

CONTROL VALVE ASSEMBLY

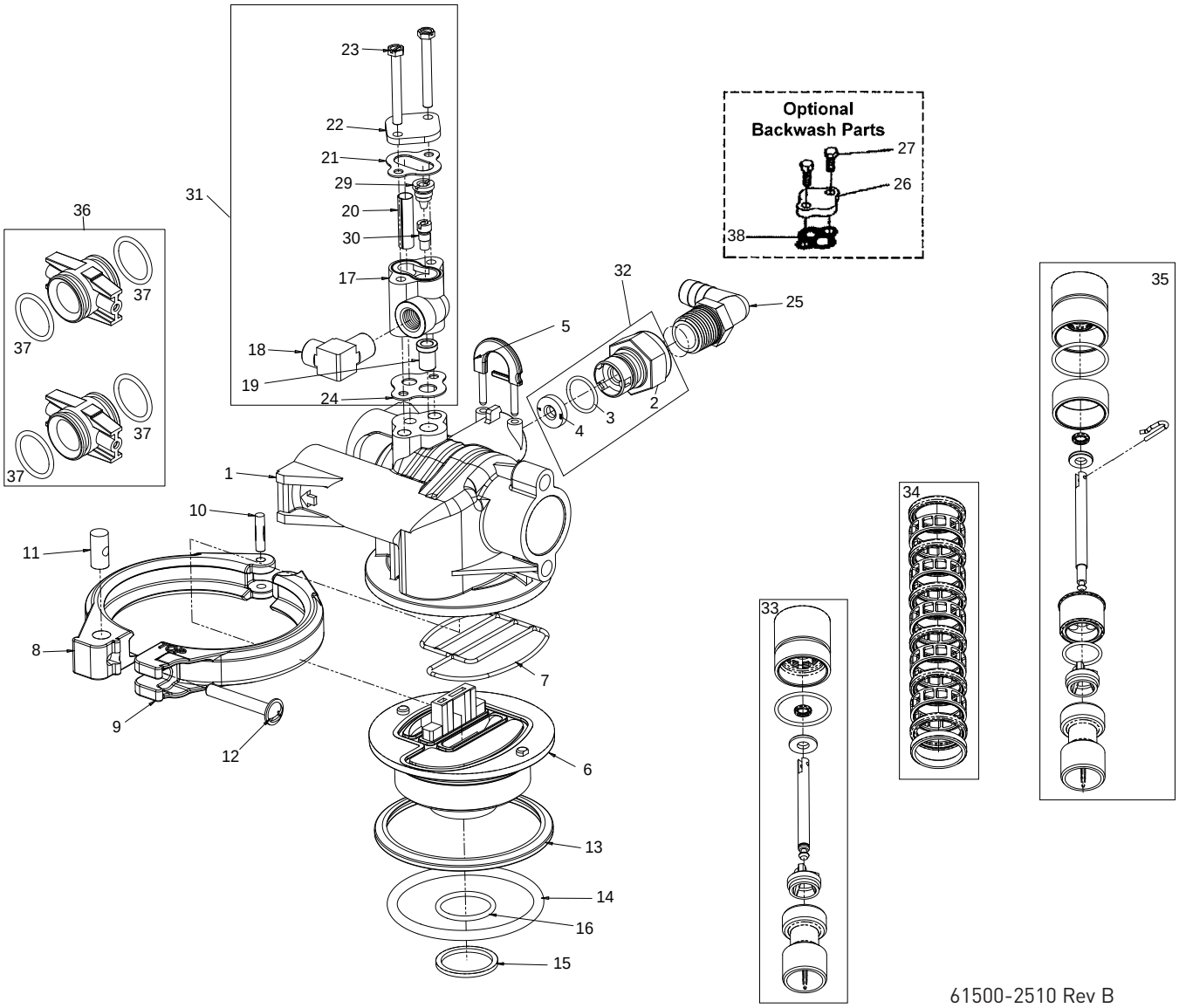

Item No.	QTY	Part No.	Description
1	1	19328	Valve Body, 2510
2	1	11385-01	Housing, Flow Control, Plastic
3	1	11183	O-ring, -017
4	1	12408	Washer, Flow, 7.0 GPM
5	1	18312	Retainer, Drain
6	1	19322	Adapter Base, 2510
7	1	19936	Seal, 2510, Base
8	1	19899	Clamp, Female, 2510
9	1	19900	Clamp, Male, 2510
10	1	40000	Pin, Hinge, Clamp
11	1	19998	Pivot, Clamp, 2510
12	1	40057	Screw, Comb Hd, 114-20, 2-inch
13	1	19197	Ring, Slip
14	1	18303	O-ring, -336
15	1	13030	Retainer, Dist Tube, O-ring
16	1	13304	O-ring, -121
17	1	17776	Body, Injector, 1600
18	1	10328	Fitting, Elbow, 90 Deg. 1/4-inch NPT x 3/8-inch Tube
19	1	16221	Disperser, Air
20	1	10227	Screen, Injector
21	1	10229	Gasket, Injector Cap, 1600
22	1	11893	Cap, Injector, SS
23	2	10692	Screw, Slot Hex Hd, 10-24 x 1-5/8-inch
24	1	14805	Gasket, Injector Body, 1600/1700

CONTROL VALVE ASSEMBLY *CONTINUED*

Item No.	QTY	Part No.	Description
25	1	12338	Fitting, Elbow, 90 Deg. 1/2-inch NPT x 1/2-inch Barb
26	1	11893	Cap, Injector, Stainless Steel
		10228	Cap, Injector, Brass
27	1	15137	Screw, Hex Wsh Mach, 10-24 x 3/8
28	1	10757	Spacer, End
29	1	12973-0	Nozzle, Injector, #0, PVC
		12973-1	Nozzle, Injector, #1, PVC
		12973-2	Nozzle, Injector, #2, PVC
		12973-3	Nozzle, Injector, #3, PVC
		12973-4	Nozzle, Injector, #4, PVC
		10913-000	Nozzle, Injector, #000 Brown
		10913-00	Nozzle, Injector, #00 Violet
		10913-0	Nozzle, Injector, #0 Red
		10913-1	Nozzle, Injector, #1 White
		10913-2	Nozzle, Injector, #2 Blue
		10913-3	Nozzle, Injector, #3 Yellow
		10913-4	Nozzle, Injector, #4 Green
30	1	12974-0	Throat, Injector, #0, PVC
		12974-1	Throat, Injector, #1, PVC
		12974-2	Throat, Injector, #2, PVC
		12974-3	Throat, Injector, #3, PVC
		12974-4	Throat, Injector, #4, PVC
		10914-000	Throat, Injector, #000 Brown
		10914-00	Throat, Injector, #00 Violet
		10914-0	Throat, Injector, #0 Red
		10914-1	Throat, Injector, #1 White
		10914-2	Throat, Injector, #2 Blue
		10914-3	Throat, Injector, #3 Yellow
		10914-4	Throat, Injector, #4 Green
31	1	60480-000	Injector Assy, 1600 #00, Plastic
		60480-00	Injector Assy, 1600 #0, Plastic
		60480-01	Injector Assy, 1600 #1, Plastic
		60480-02	Injector Assy, 1600 #2, Plastic
		60480-03	Injector Assy, 1600 #3, Plastic
		60480-04	Injector Assy, 1600 #4, Plastic
32	1	60705-00	DLFC, Plastic Blank
		60705-06	DLFC, Plastic 0.60 gpm
		60705-08	DLFC, Plastic 0.80 gpm
		60705-10	DLFC, Plastic 1.0 gpm
		60705-12	DLFC, Plastic 1.2 gpm
		60705-13	DLFC, Plastic 1.3 gpm
		60705-15	DLFC, Plastic 1.5 gpm
		60705-17	DLFC, Plastic 1.7 gpm
		60705-20	DLFC, Plastic 2.0 gpm
		60705-24	DLFC, Plastic 2.4 gpm
		60705-30	DLFC, Plastic 3.0 gpm
		60705-35	DLFC, Plastic 3.5 gpm
		60705-40	DLFC, Plastic 4.0 gpm
		60705-45	DLFC, Plastic 4.5 gpm
		60705-50	DLFC, Plastic 5.0 gpm
		60705-60	DLFC, Plastic 6.0 gpm
		60705-70	DLFC, Plastic 7.0 gpm
		60706-8.0	DLFC, QC x 3/4-inch F, 8.0 gpm
		60706-9.0	DLFC, QC x 3/4-inch F, 9.0 gpm
		60706-10	DLFC, QC x 3/4-inch F, 10 gpm
		60706-12	DLFC, QC x 3/4-inch F, 12 gpm
		60706-15	DLFC, QC x 3/4-inch F, 15 gpm
		60706-20	DLFC, QC x 3/4-inch F, 20 gpm
33	1	60090	Piston Assy, 1500, 2510, 2750
34	1	60121	Seal Kit, 1500, 2510, 2750
	1	60121-10	Seal and Spacer Kit, 2510, 2750, Silicone
35	1	60101-01	Piston Assy, NHWBP
36	2	19228-01	Adapter Assy, Coupling w/O-ring
37	4	13305	O-ring, -119
38	1	14805	Gasket, Injector Body, 1600/1700

Not Shown

	1	11098	Stuffer Tool Assy, 2510/2750
	1	13061	Puller Assy, Port Ring 2510/2750
	1	12874	Hook, Seal

NOTE: For optimal seal life, the use of lubricants is not recommended.

SOFTENER FILTER CONVERSION KITS

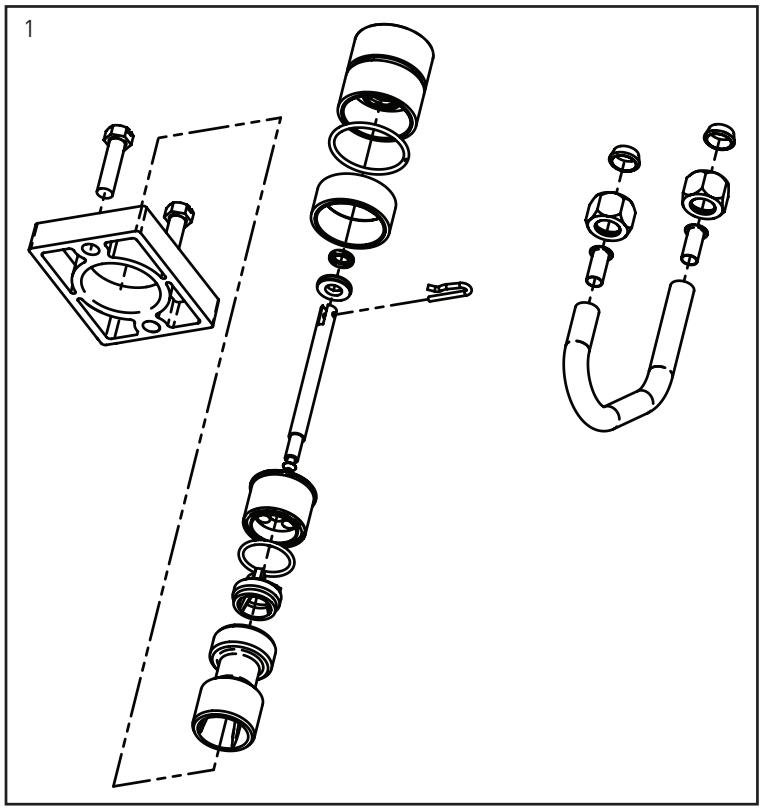

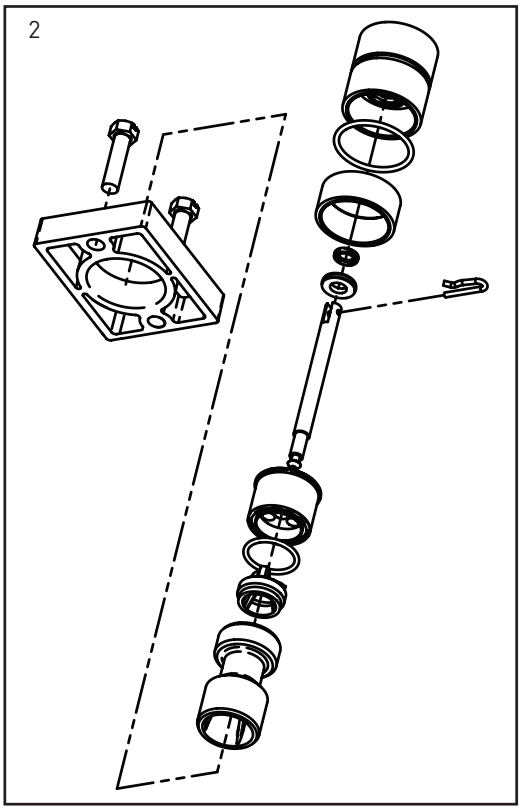

61671 Rev E

Item No.	QTY	Part No.	Description
1		60101-02	Piston Conversion, No Seals, No Spacers, 2510 NHWBP 1600
2		60101-00	Piston Kit, No Seals, No Spacers, 2510 NHWBP Filter

NOTE: For optimal seal life, the use of lubricants is not recommended.

METER ASSEMBLY

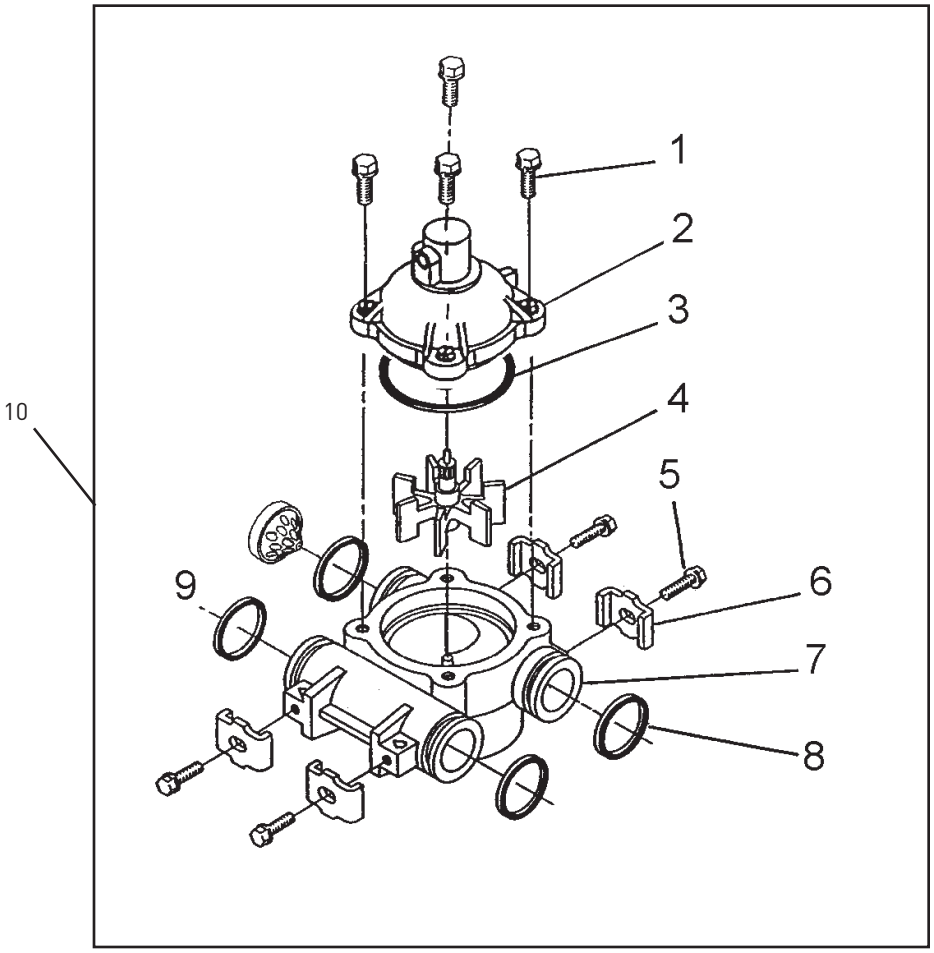

60088 Rev E

Item No.	QTY	Part No.	Description
1	4	12473	Screw - Meter Cover Assembly, 10-24 x 5/8-inch
2	1	15659	Meter Cover Assy. - Ext., Rt. Angle (Not Shown)
		15452	Meter Cap Assy, 3/4-inch to 2-inch , Std, Rt Ang/90, Plastic Paddle
3	1	13847	O-ring - Meter Cover Assembly, -137
4	1	13509	Impeller
5	4	13314	Screw - Adapter Clip, 8-18 x 0.6-inch
6	4	13255	Adapter Clip
7	1	13821	Meter Body
8	4	13305	O-ring - Meter Body, -119
9	1	14613	Flow Straightener
10	1	60088-180	Meter Assy, 3/4-inch Dual Port, Slip Std, RT Angle/180 Plastic Paddle Wheel, w/clips
		60089-180	Meter Assy, 3/4-inch Dual Port, Slip, EXT, RT Angle/180 Plastic Paddle Wheel, w/clips

1600 BRINE SYSTEM ASSEMBLY

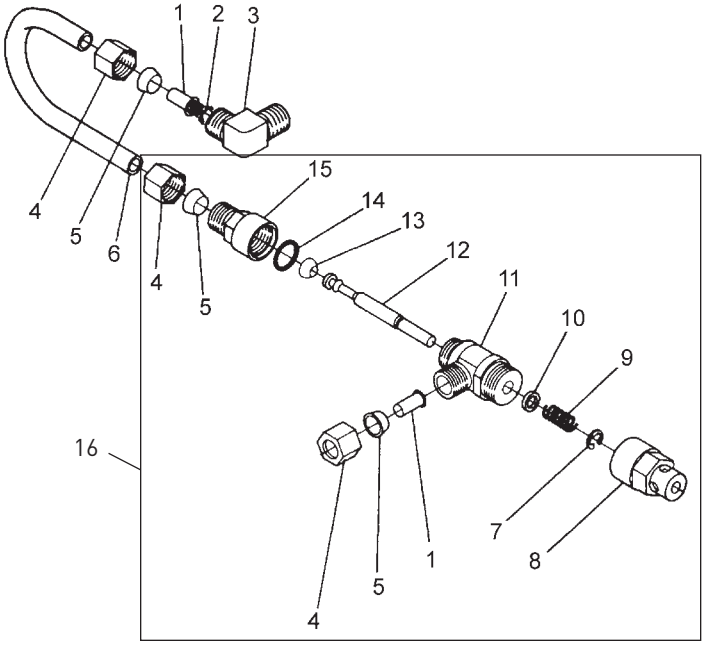

60029 Rev C

Item No.	QTY	Part No.	Description
1	2	10332	Fitting, Insert, 3/8
2	1	12767	Screen, Brine
3	1	10328	Fitting, Elbow, 90 Deg. 1/4-inch NPT x 3/8Tube
4	3	10329	Fitting, Tube, 3/8 Nut, Brass
5	3	10330	Fitting, Sleeve, 3/8 Celcon
6	1	16508-01	Tube, Brine Valve, 2850/2900s
		12774	Tube, Brine Valve, 1500
		40027	Tube, Brine Valve, 2510, HWBP
		14428	Tube, Brine Valve, 1600/1650, NHWBP
		15221-01	Tube, Brine Valve, 2750/2900
		42184	Tube, Brine Valve, 2850s
		41683	Tube, Brine Valve, UF, 2900S 1600/1650
7	1	10250	Ring, Retaining
8	1	11749	Guide, Brine Valve Stem
9	1	10249	Spring, Brine Valve
10	1	12550	Quad Ring, -009
11	1	12748	Brine Valve Body Assy, 1600 w/Quad Ring
12	1	12552-02	Brine Valve Stem, 1600, with Seat
13	1	12626	Seat, Brine Valve
14	1	11982	O-ring, -016
15	1	60020-25	BLFC, .25 GPM, 1600
		60020-50	BLFC, .50 GPM, 1600
		60020-100	BLFC, 1.0 GPM, 1600
16	1	60029-010	Brine Valve, 1600 Short Stem, 0.25 gpm
		60029-020	Brine Valve, 1600 Short Stem, 0.50 gpm
		60029-030	Brine Valve, 1600 Short Stem, 1.00 gpm

1650 BRINE SYSTEM

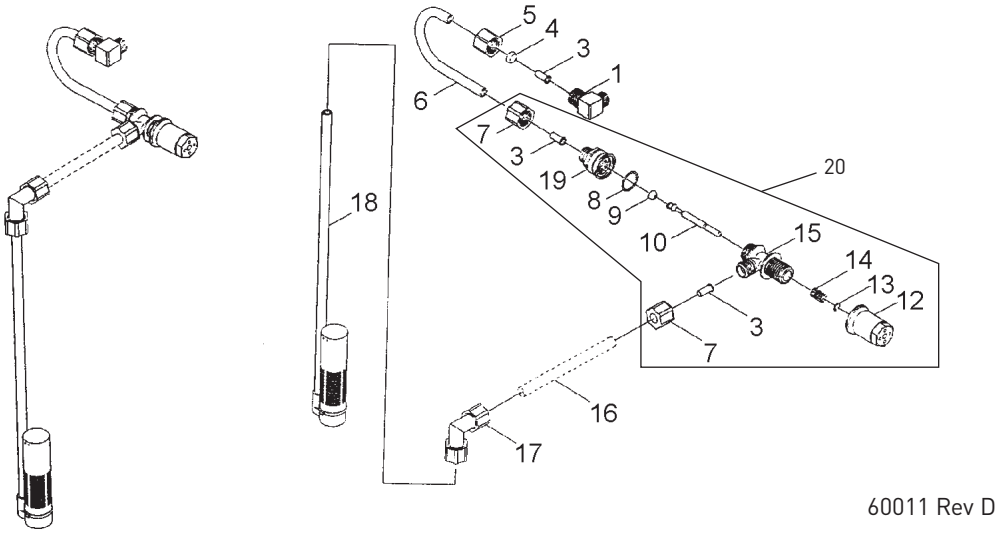

Item No.	QTY	Part No.	Description
1	1	10328	Elbow, 90 1/4 NPT x 3/8
3	3	10332	Insert, 3/8
4	1	10330	Sleeve, 3/8 Nut Brine
5	1	10329	Tube Fitting, 3/8 Nut Brine
6	1	16508-01	Tube, Brine Valve, 2850/2900s
		12774	Tube, Brine Valve, 1500
		40027	Tube, Brine Valve, 2510, HWBP
		14428	Tube, Brine Valve, 1600/1650, NHWBP
		15221-01	Tube, Brine Valve, 2750/2900
		42184	Tube, Brine Valve, 2850s
		41683	Tube, Brine Valve, UF, 2900S 1600/1650
7	2	19625	Assy., GFN Nut
8	1	16924	O-ring, -018
9	1	12626	Seat, Brine Valve
10	1	12552	Brine Valve Stem, 1600
12	1	17906	Guide, Brine Valve Stem
13	1	10250	Retaining Ring
14	1	10249	Spring, Brine Valve
15	1	17884	Brine Valve Body Assy., Plastic
17	1	12794	Elbow, 3/8 Tube Poly, White
18	1	60002	#500 Air Check

Item No.	QTY	Part No.	Description
19			**60010-25 BLFC Assy. (Parts)**
	1	17907	Housing
	1	12128	25 GPM Label
	1	12094	25 Flow Washer
	1	12098	Retainer
			60010-50 BLFC Assy. (Parts)
	1	17907	Housing
	1	10759	50 GPM Label
	1	12095	50 Flow Washer
	1	12098	Retainer
			60010-100 BLFC Assy. (Parts)
	1	17907	Housing
	1	10760	1.0 GPM Label
	1	12097	1.0 Flow Washer
	1	12098	Retainer
20		60011-010	Brine Valve, 1650, Short Stem, 0.25 gpm
		60011-020	Brine Valve, 1650, Short Stem, 0.50 gpm
		60011-030	Brine Valve, 1650, Short Stem, 1.00 gpm

BYPASS VALVE ASSEMBLY (PLASTIC)

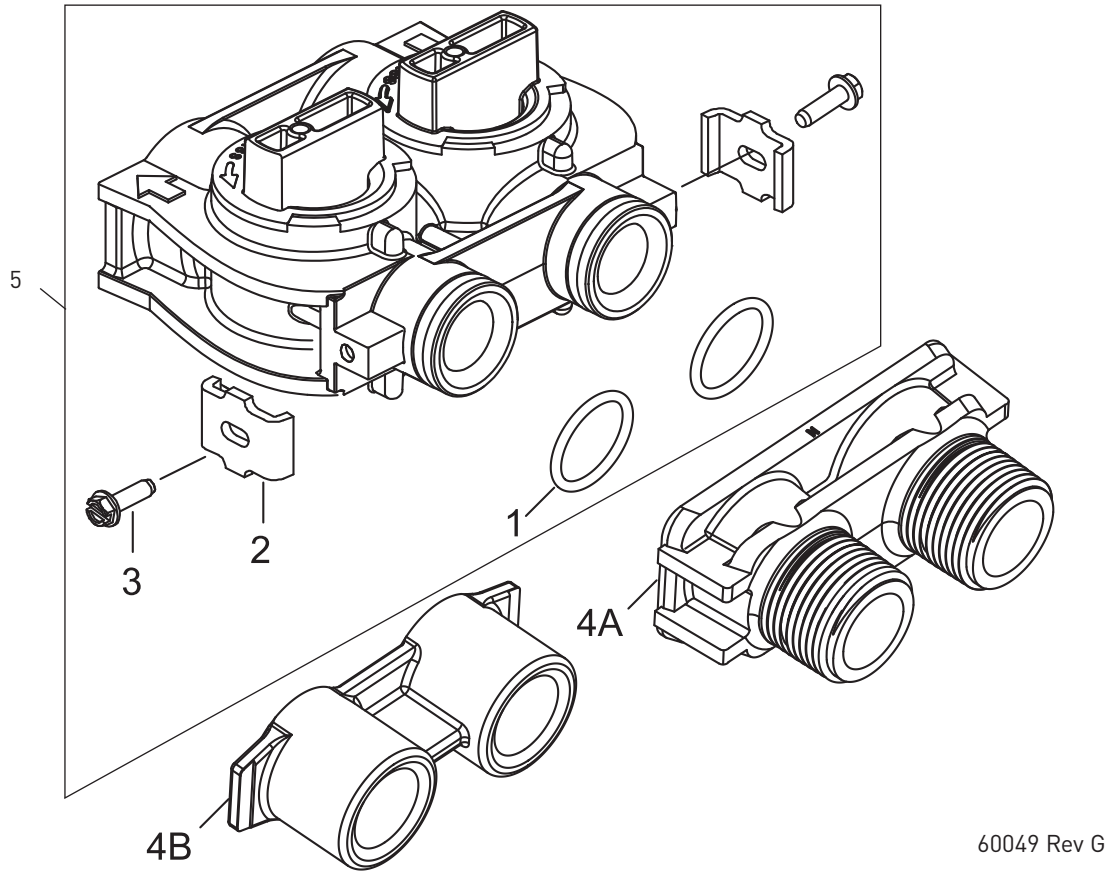

Item No.	QTY	Part No.	Description
1	2	13305	O-ring, -119
2	2	13255	Clip, Mounting
3	2	13314	Screw, Slot Ind Hex, 8-18 x .60
4A	1	18706	Yoke, 1-inch , NPT, Plastic
		18706-02	Yoke, 3/4-inch , NPT, Plastic
4B	1	13708-40	Yoke, 1-inch , Sweat
		13708-45	Yoke, 3/4-inch , Sweat
		19275	Yoke, Angle 90 Deg, 3/4-inch , NPT
		19275-45	Yoke, Angle 90 Deg, 3/4-inch Sweat
		19620-01	Yoke Assy, 3/4-inch , R/Angle, 90 Deg w/O-rings, Clips & Screws
		40636	Yoke, 1-1/4 inch, NPT
		40636-49	Yoke, 1-1/4 inch, Sweat
		41027-01	Yoke, 3/4-inch , NPT, Cast, Machined
		41026-01	Yoke, 1-inch , NPT, Cast, Machined, SS
		41026-02	Yoke, 1-inch , BSP, Cast, MACHD, SS
		18706-10	Yoke, 1-inch , BSP, Plastic
		41027-02	Yoke, 3/4-inch , BSP, Cast, MACHD
		18706-12	Yoke, 3/4-inch , BSP, Plastic
		19620-01	Yoke Assy, 3/4-inch , R/Angle, 90 Deg
5	1	60049	Bypass Plastic
*	2	19228-01	Adapter Assy, Coupling, w/O-rings

*Not Shown

BYPASS VALVE ASSEMBLY (METAL)

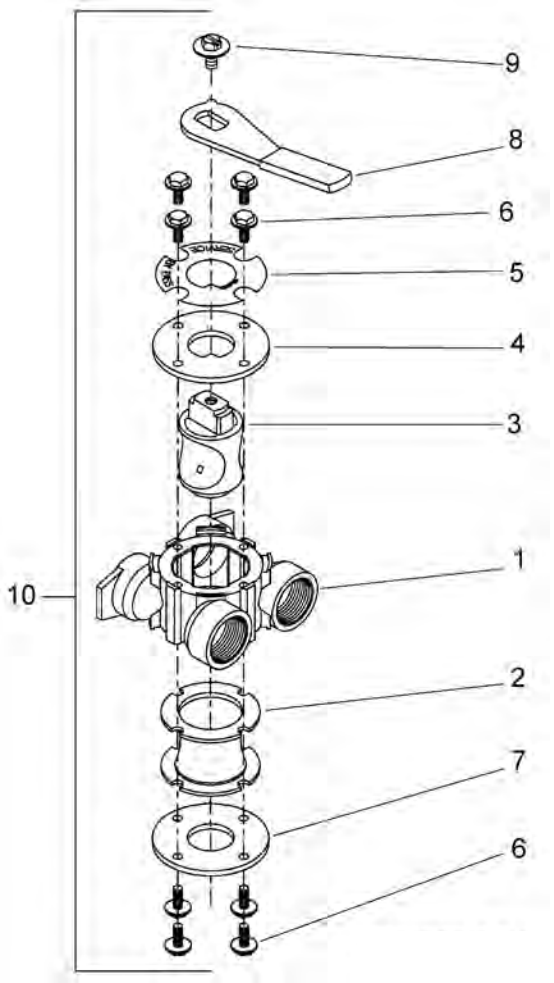

60040SS Rev T
60041SS Rev U

Item No.	QTY	Part No.	Description
1	1	40614	Bypass Body, 3/4-inch
		40634	Bypass Body, 1-inch , SS
2	1	14105	Seal, Bypass, 560CD
3	1	11972	Plug, Bypass
4	1	11978	Side Cover
5	1	13604-01	Label
6	8	15727	Screw, 10-24 x 0.5-inch
7	1	11986	Side Cover
8	1	11979	Lever, Bypass
9	1	11989	Screw, Hex Head, 1/4-14 x 1.5-inch
10	1	60040SS	Bypass Valve, 5600, 3/4-inch NPT Blk Grip Lever, SS
		60041SS	Bypass Valve, 5600, 1-inch NPT Blk Grip Lever, SS
*	2	19228-01	Adapter Assy, Coupling, w/O-rings

*Not Shown

2300 SAFETY BRINE VALVE

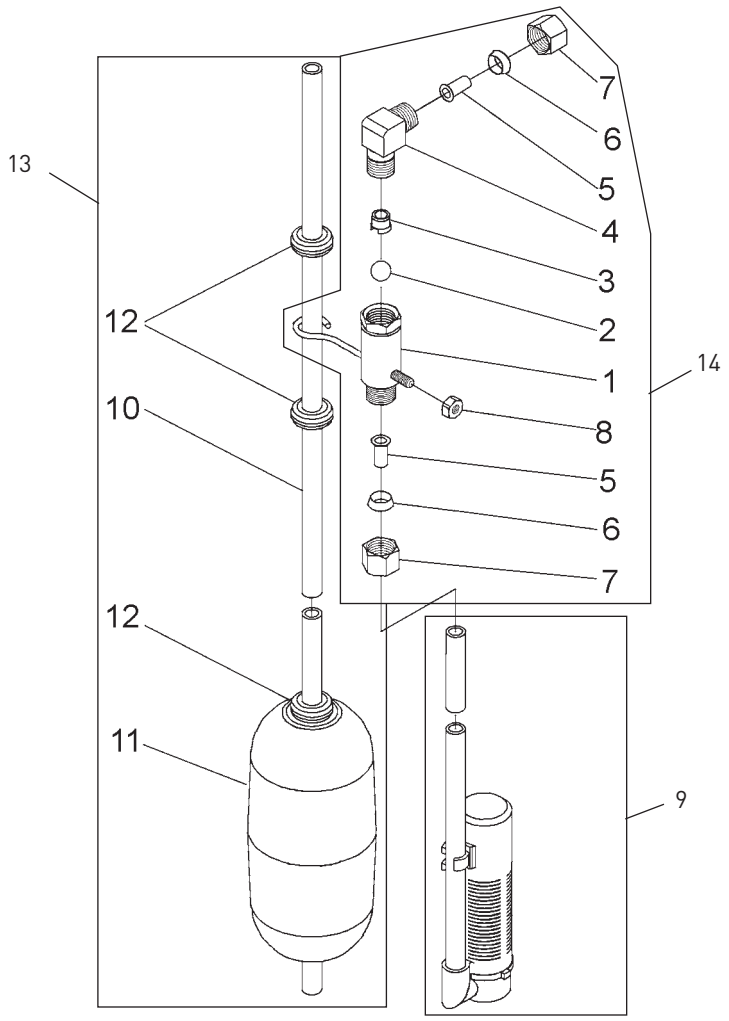

60027 Rev D

Item No.	QTY	Part No.	Description
1	1	60027-00	Safety Brine Valve, 2300, Less Elbow
2	1	10138	Ball, 3/8-inch , Brass
3	1	11566	Ball Stop, Slow Fill
4	1	10328	Fitting, Elbow, 90 Deg. 1/4 NPT x 3/8 Tube
5	1	10332	Fitting, Insert, 3/8
6	1	10330	Fitting, Sleeve, 3/8 Celcon
7	1	10329	Fitting, Tube, 3/8 Nut, Brass
8	1	10186	Nut, Hex, 10-32
9	1	60002-10	Air Check, #500, American Hydro
		60002-11.38	Air Check, #500, 11.38 inches Long
		60002-24	Air Check, #500, 24 inches Long
		60002-27	Air Check, #500, 27 inches Long
		60002-32	Air Check, #500, 32 inches Long
		60002-34	Air Check, #500, 34 inches Long
		60002-36	Air Check, #500, 36 inches Long
		60002-48	Air Check, #500, 48 inches Long
		60002-26.25	Air Check, #500, 26.25 inches Long
		60002-33.25	Air Check, #500, 33.25 inches Long
10	1	10149	Rod, Float, 30-inch
11	1	10700	Float Assy, White
12	3	10150	Grommet, .30 Dia
13	1	60028-30	Float Assy, 2300, 30-inch White
14	1	60027-FFA	Safety Brine Valve, 2300, Fitting Facing Arm
	1	60027-FFS	Safety Brine Valve, 2300 Fitting Facing Stud

2310 SAFETY BRINE VALVE

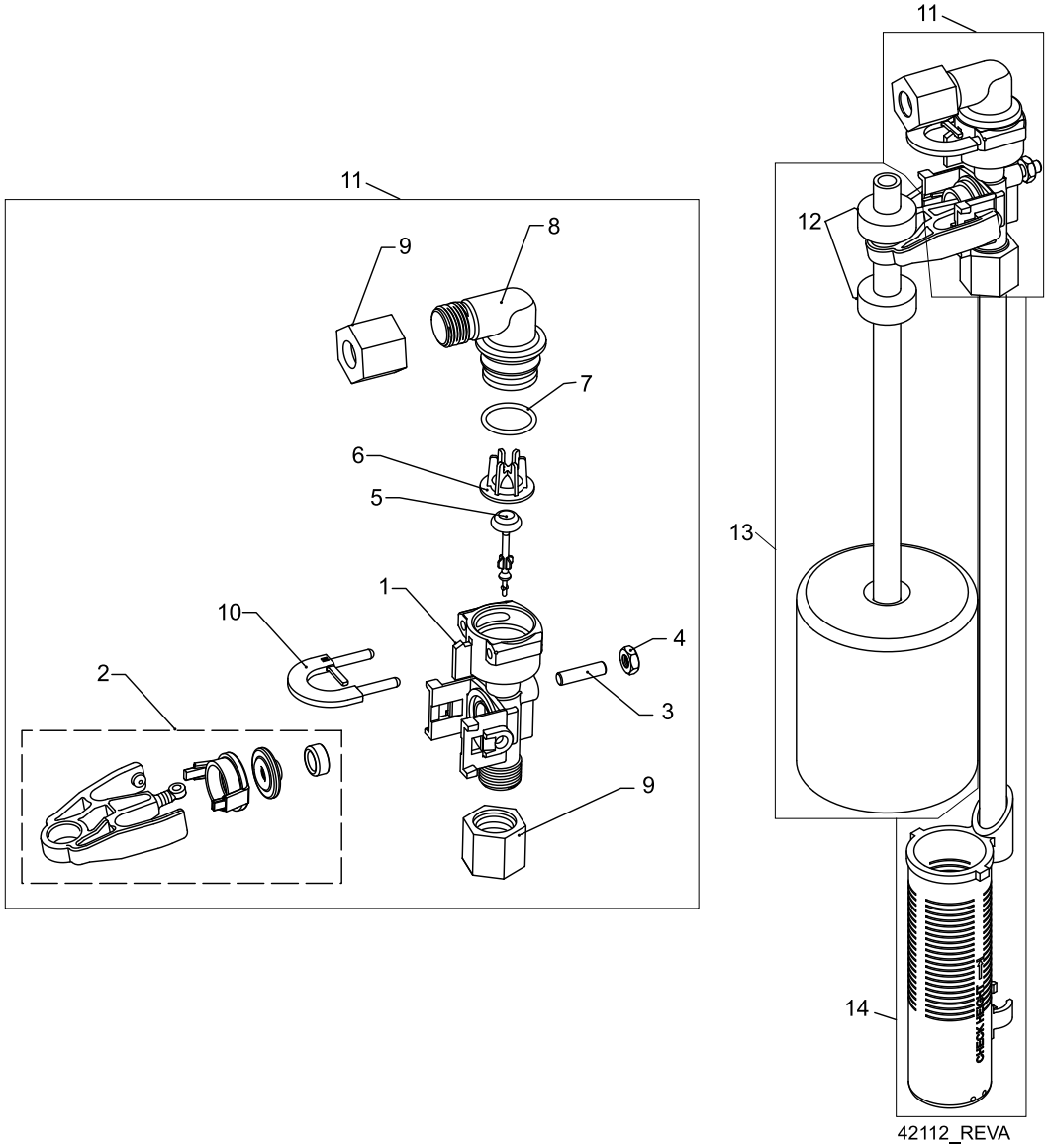

2310 SAFETY BRINE VALVE *CONTINUED*

Item No.	QTY	Part No.	Description
1	1	19645	Body, Safety Brine Valve, 2310
2	1	19803	Safety Brine Valve Assy
3	1	19804	Screw, Sckt Hd, Set, 10-24 x .75
4	1	19805	Nut, Hex, 10-24, Nylon Black
5	1	19652-01	Poppet Assy, SBV w/O-ring
6	1	19649	Flow Dispenser
7	1	11183	O-ring, -017
8	1	19647	Elbow, Safety Brine Valve
9	2	19625	Nut Assy, 3/8-inch Plastic
10	1	18312	Retainer, Drain
11	1	60014	Safety Brine Valve Assy, 2310
12	2	10150	Grommet, .30 Dia
13	1	60068-8.06	Float Assy, 2310, w/8.06-inch Rod
		60068-10.5	Float Assy, 2310, w/10.5-inch Rod
		60068-11.5	Float Assy, 2310, w/11.5-inch Rod
		60068-20	Float Assy, 2310, w/20-inch Rod
		60068-30	Float Assy, 2310, w/30-inch Rod
14	1	60002-10	Air Check, #500, American Hydro
		60002-11.38	Air Check, #500, 11.38 inches Long
		60002-24	Air Check, #500, 24 inches Long
		60002-27	Air Check, #500, 27 inches Long
		60002-32	Air Check, #500, 32 inches Long
		60002-34	Air Check, #500, 34 inches Long
		60002-36	Air Check, #500, 36 inches Long
		60002-48	Air Check, #500, 48 inches Long
		60002-26.25	Air Check, #500, 26.25 inches Long
		60002-33.25	Air Check, #500, 33.25 inches Long

SEAL & SPACER TOOLS & REPLACEMENT

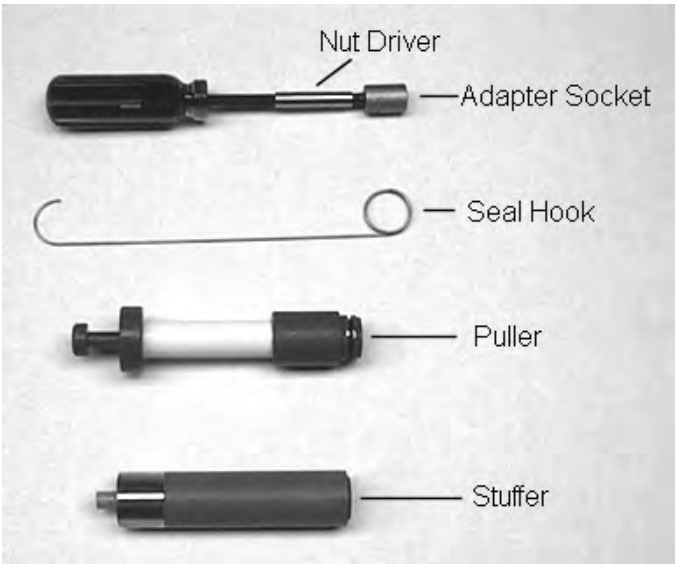

Figure 5

NOTE: Photos shown are for reference only for replacing the seal and spacer. Actual valve may be different.

1. Turn off water supply to valve. Next, cycle valve to backwash position, then to service. Now remove electrical plug from outlet.
2. Remove control box cover.
3. Disconnect the brine line from the injector housing to the brine valve (if your unit has timed brine tank fill).
4. Remove the two capscrews that hold the back plate to the valve.
5. Grasp the back plate on both sides and slowly pull end plug and piston assembly out of the valve body (see "Figure 6") and lay aside.

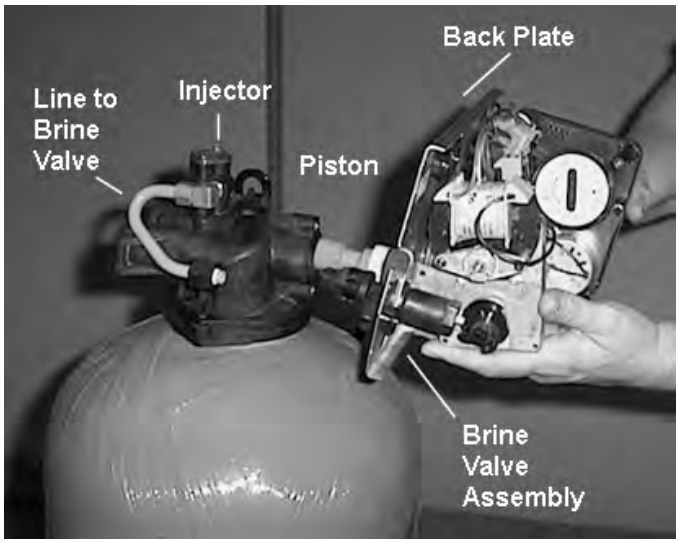

Figure 6

6. Remove the seal first using the wire hook with the finger loop (see "Figure 7").

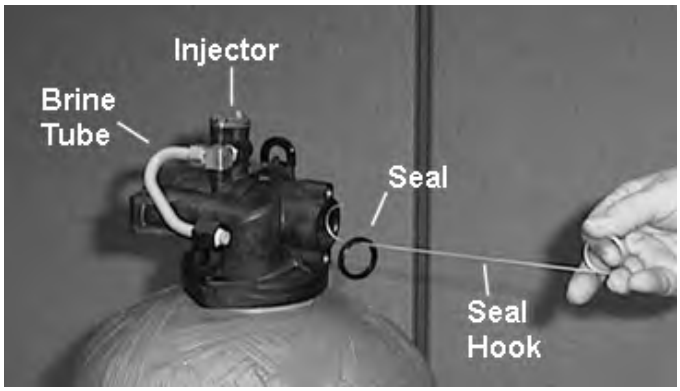

Figure 7

7. The spacer tool (use only for removing the spacers) has three retractable pins, retained by a rubber ring, at one end. They are retracted or pushed out by pulling or pushing the center button the opposite end.
8. Insert the pin end of the spacer tool into the valve body with the pins retracted (button pulled back). Push the tool tight against the spacer and push the button in, (see Figure 8). When the button is pushed in, the pins are pushed out to engage the 1/4 dia. holes in the spacer. Remove the tool from the valve body. The spacer will be on the end. Pull the center button back, the pins will be retracted and the spacer can be removed from the spacer tool.

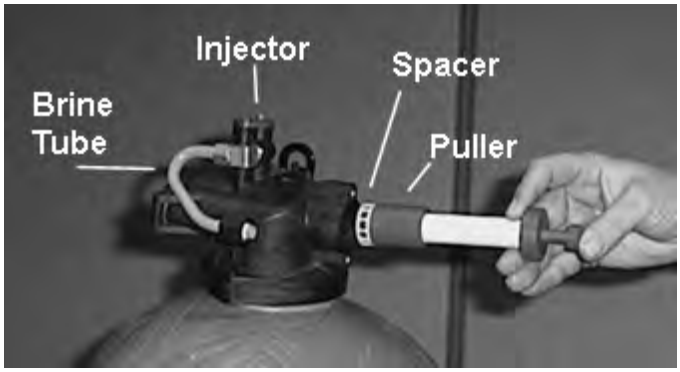

Figure 8

9. Alternately remove the remaining seals and spacers in accordance with steps No. 6 and 8.
10. The last or end spacer does not have any holes for the pins of the spacer tool to engage, therefore if the end spacer does not come out on the first try, try again using the wire hook with the finger loop.

SEAL & SPACER TOOLS & REPLACEMENT

CONTINUED

11. To replace seals, spacers and end ring, use special tool with the brass sleeve on one end. This is a double-purpose tool (see Figure 5). The male end acts as a pilot to hold the spacers as they are pushed into the valve body and the brass female end is used to insert the seals into the valve body.

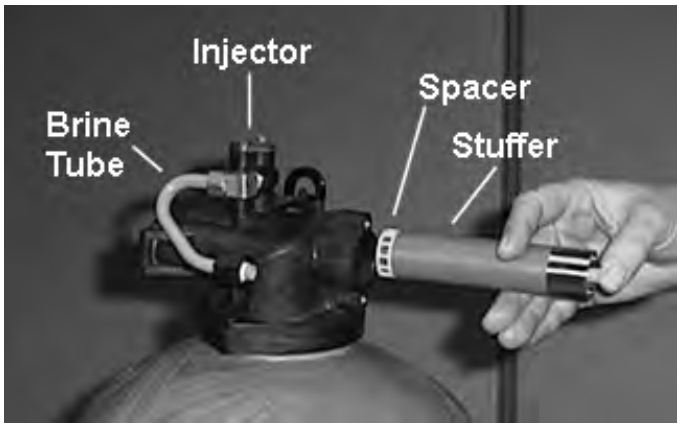

Figure 9

12. To restuff a valve body, first take the end ring (the plastic or brass ring without holes), then with your thumb press the button on the brass sleeve end. The large dia. inner portion is now exposed (see Figure 8). Place the end ring on this pilot with the lip on the end ring facing the tool. Push the tool into the valve body bore until it bottoms. While the tool is in the valve body, take a seal and press it into the inside diameter of the exposed brass female end.
13. Remove the tool, turn it end for end and insert it into the valve body bore. While holding the large dia. of the tool, slide it all the way into the valve body bore until it bottoms. Then push the center button to push the seal of the tool and leave it in place in the valve body.
14. Remove the tool from the valve body and push the center on the brass female end to expose the pilot on the opposite end. Place a spacer on this end and insert the spacer and tool into the valve.

GENERAL SERVICE HINTS FOR METER CONTROL

Problem: Softener delivers hard water

Reason: Reserve capacity has been exceeded.

Correction: Check salt dosage requirements and reset program wheel to provide additional reserve.

Reason: Program wheel is not rotating with meter output.

Correction: Pull cable out of meter cover and rotate manually. Program wheel must move without binding and clutch must give positive clicks when program wheel strikes regeneration stop. If it does not, replace timer.

Reason: Meter is not measuring flow.

Correction: Check meter with meter checker.

TROUBLESHOOTING

Problem	Cause	Correction
Water conditioner fails to regenerate.	Electrical service to unit has been interrupted	Assure permanent electrical service (check fuse, plug, pull chain, or switch)
	Timer is defective.	Replace timer.
	Power failure.	Reset time of day.
Hard water.	By-pass valve is open.	Close by-pass valve.
	No salt is in brine tank.	Add salt to brine tank and maintain salt level above water level.
	Injector screen plugged.	Clean injector screen.
	Insufficient water flowing into brine tank.	Check brine tank fill time and clean brine line flow control if plugged.
	Hot water tank hardness.	Repeated flushings of the hot water tank is required.
	Leak at distributor tube.	Make sure distributor tube is not cracked. Check o-ring and tube pilot.
	Internal valve leak.	Replace seals and spacers and/or piston.
Unit used too much salt.	Improper salt setting.	Check salt usage and salt setting.
	Excessive water in brine tank.	See "Excessive water in brine tank".
Loss of water pressure.	Iron buildup in line to water conditioner.	Clean line to water conditioner.
	Iron buildup in water conditioner.	Clean control and add mineral cleaner to mineral bed. Increase frequency of regeneration.
	Inlet of control plugged due to foreign material broken loose from pipes by recent work done on plumbing system.	Remove piston and clean control.
Loss of mineral through drain line.	Air in water system.	Assure that well system has proper air eliminator control. Check for dry well condition.
	Improperly sized drain line flow control.	Check for proper drain rate.
Iron in conditioned water.	Fouled mineral bed.	Check backwash, brine draw, and brine tank fill. Increase frequency of regeneration. Increase backwash time.
Excessive water in brine tank.	Plugged drain line flow control.	Clean flow control.
	Plugged injector system.	Clean injector and screen.
	Timer not cycling.	Replace timer.
	Foreign material in brine valve.	Replace brine valve seat and clean valve.
	Foreign material in brine line flow control.	Clean brine line flow control.
Softener fails to draw brine.	Drain line flow control is plugged.	Clean drain line flow control.
	Injector is plugged.	Clean injector
	Injector screen plugged.	Clean screen.
	Line pressure is too low.	Increase line pressure to 20 psi
	Internal control leak	Change seals, spacers, and piston assembly.
	Service adapter did not cycle.	Check drive motor and switches.
Control cycles continuously.	Misadjusted, broken, or shorted switch.	Determine if switch or timer is faulty and replace it, or replace complete power head.
Drain flows continuously.	Valve is not programming correctly.	Check timer program and positioning of control. Replace power head assembly if not positioning properly.
	Foreign material in control.	Remove power head assembly and inspect bore. Remove foreign material and check control in various regeneration positions.
	Internal control leak.	Replace seals and piston assembly.

FLOW DATA & INJECTOR DRAW RATES

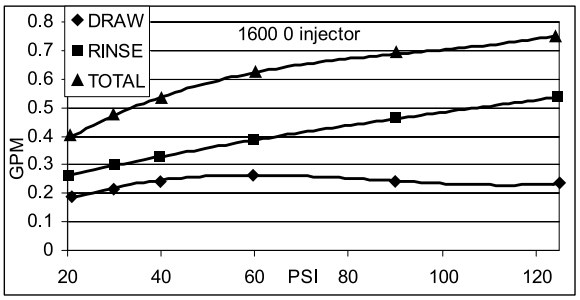

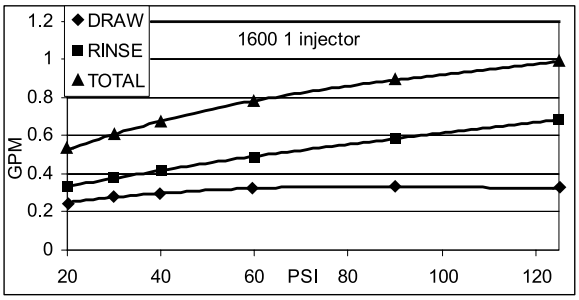

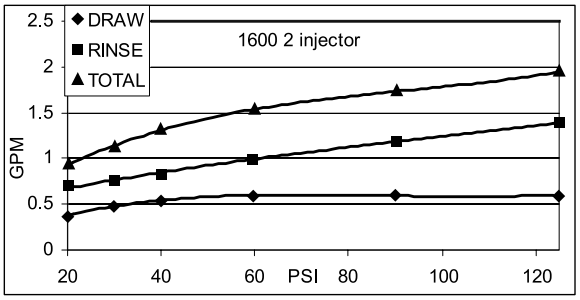

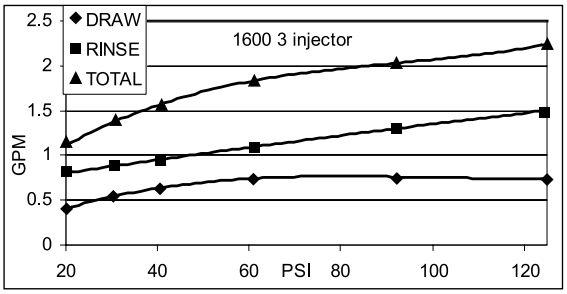

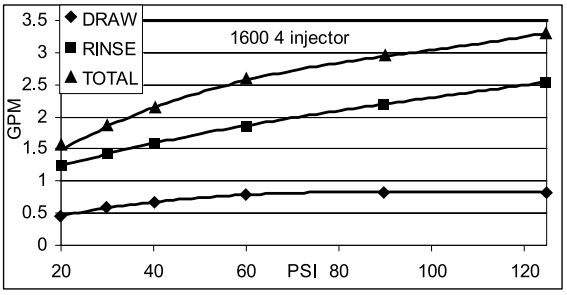

TR20391_REVA

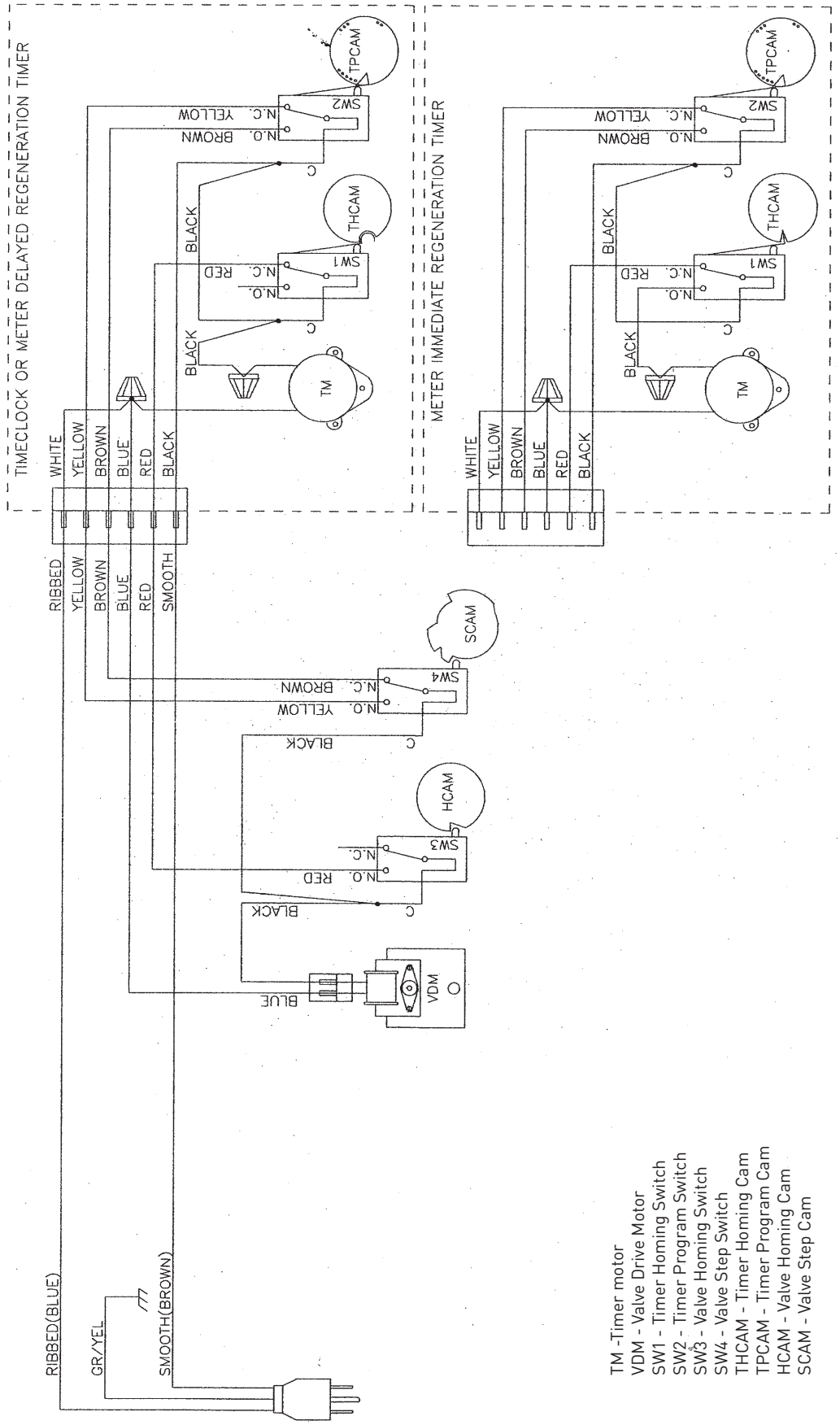

TM -Timer motor
VDM - Valve Drive Motor
SW1 - Timer Homing Switch
SW2 - Timer Program Switch
SW3 - Valve Homing Switch
SW4 - Valve Step Switch
THCAM - Timer Homing Cam
TPCAM - Timer Program Cam
HCAM - Valve Homing Cam
SCAM - Valve Step Cam

NOTE:
1. Single Tank Timeclock, Meter Delayed, or Meter Immediate Regeneration
2. Valve Shown In Service Position.

19201 Rev C

SERVICE ASSEMBLIES

24 Hour Gear Assemblies
40096-02 ..... Dial 2AM Regen Assy, Black
40096-24 ..... Dial 12AM Regen Assy, Black
60519-02 ..... Gear Assy, 3200 24 Hour 2 Times/Day
60519-03 ..... Gear Assy, 3200, 24 Hour 3 Times/Day
60519-04 ..... Gear Assy, 3200, 24 Hour 4 Times/Day
60519-06 ..... Gear Assy, 3200, 24 Hour (12:00) 6 Times/Day

Brine Line Flow Control (BLFC)
60010-25 ..... BLFC, 1650, .25 GPM, Plastic
60010-50 ..... BLFC, 1650, .50 GPM, Plastic
60010-100 ..... BLFC, 1650, 1.0 GPM, Plastic

Brine Valves
60011-010 ..... Brine Valve, 1650, Short Stem, .25 GPM, Less Tube
60011-030 ..... Brine Valve, 1650, Short Stem, 1.0 GPM, Less Tube

Bypasses
60049..... Bypass Plastic Assy
60040SS ..... Bypass Valve, 5600, 3/4-inch NPT
60041SS ..... Bypass Valve, 5600, 1-inch NPT

Cam
60160-15 ..... Drive Cam Assy, STF, Blue

Clamp
60503..... Clamp Ring Assembly, 2510

Coupling
60510..... Adapter Coupling Assy, 5600

Drain Line Flow Controls
60705-00 ..... DLFC, Plastic, Blank
60705-06 ..... DLFC, Plastic, .60 GPM
60705-08 ..... DLFC, Plastic, .80 GPM
60705-10 ..... DLFC, Plastic, 1.0 GPM
60705-12 ..... DLFC, Plastic, 1.2 GPM
60705-13 ..... DLFC, Plastic, 1.3 GPM
60705-15 ..... DLFC, Plastic, 1.5 GPM
60705-17 ..... DLFC, Plastic, 1.7 GPM
60705-20 ..... DLFC, Plastic, 2.0 GPM
60705-24 ..... DLFC, Plastic, 2.4 GPM
60705-30 ..... DLFC, Plastic, 3.0 GPM
60705-35 ..... DLFC, Plastic, 3.5 GPM
60705-40 ..... DLFC, Plastic, 4.0 GPM
60705-45 ..... DLFC, Plastic, 4.5 GPM
60705-50 ..... DLFC, Plastic, 5.0 GPM
60705-60 ..... DLFC, Plastic, 6.0 GPM
60705-70 ..... DLFC, Plastic, 7.0 GPM
60705-8.0 ..... DLFC, QC x 3/4-inch F, 8.0 GPM
60705-9.0 ..... DLFC, QC x 3/4-inch F, 9.0 GPM
60705-12 ..... DLFC, QC x 3/4-inch F, 12.0 GPM
60705-15 ..... DLFC, QC x 3/4-inch F, 15.0 GPM

Drives
60050-21 ..... Drive Assy, 2750, STF, 120V Softener

Injectors
60480-xx..... 1600 Injector Assy (Specify size of Injector)

Meters
60088-180 ..... Meter Assy, 3/4-inch Dual Port, Slip Std, Rt Ang/180 Plastic Paddle w/clps
60089-180 ..... Meter Assy, 3/4-inch Dual Port, Slip Ext, Rt Ang/180 Plastic Paddle w/clps

Pistons
60090..... Piston Assy, 1500, 2510, 2750
60101-01 ..... Piston Assy, NHWBP
60101-02 ..... Piston Conversion, 2510 NHWBP 1600
60101-00 ..... Piston Kit, 2510 NHWBP Filter

Program Wheels
60405-10 ..... Program Wheel, w/3/4-inch Std Label Set @ 21
60405-15 ..... Program Wheel, w/3/4-inch Std Label w/People Label Set @ 21

Safety Brine (2300)
60028-30 ..... Float Assy, 2350, 30-inch , White
60027-FFA..... Safety Brine Valve Body, 2300 Fitting Facing Arm
60027-FFS..... Safety Brine Valve Body, Fitting Facing Stud

Sales and Service Aids
40097..... Literature, 2510, S/Manual
16510..... Literature, 2510, Spec Sheet

Seal & Spacer Kits
60121..... Seal Kit, 1500, 2510, 2750
60121-10 ..... Seal & Spacer Kit, 2750, Silicone

Skipper Wheels
14860..... Skipper Wheel Assy, 7 Day
14381..... Skipper Wheel Assy, 12 Day

Yokess
13708-40 ..... Yoke, 1-inch , Sweat
13708-45 ..... Yoke, 3/4-inch , Sweat
18706..... Yoke, 1-inch , NPT, Plastic
18706-20 ..... Yoke, 3/4-inch , NPT, Plastic
19275..... Yoke, Angle 90 Deg. 3/4-inch , NPT
19275-45 ..... Yoke, Angle 90 Deg. 3/4-inch Sweat
19620-01 ..... Yoke Assy, 3/4-inch , R/Angle, 90 Deg w/O-rings, Clips and Screws
40636..... Yoke, 1-1/4 inch, NPT
40636-49 ..... Yoke, 1-1/4 inch, Sweat
41026-01 ..... Yoke, 1-inch , NPT, SS
41027-01 ..... Yoke, 3/4-inch , NPT, Cast, Machd

For Fleck® Product Warranties visit:
Fleck® para las garantías de los productos visite:
Pour Fleck® garanties produit visitez le site :
www.pentairaqua.com/pro

PENTAIR

FILTRATION & PROCESS
5730 NORTH GLEN PARK ROAD, MILWAUKEE, WI 53209
P: 262.238.4400 | WWW.PENTAIRAQUA.COM | CUSTOMER CARE: 800.279.9404 | tech-support@pentair.com

All Pentair trademarks and logos are owned by Pentair, Inc. or its affiliates. All other registered and unregistered trademarks and logos are the property of their respective owners. Because we are continuously improving our products and services. Pentair reserves the right to change specifications without prior notice. Pentair is an equal opportunity employer.
40097 REV N SE14 © 2014 Pentair Residential Filtration, LLC All Rights Reserved.